A GRAMMAR OF KODAGU

Dr. R. BALAKRISHNAN

ANNAMALAI UNIVERSITY
ANNAMALAI NAGAR.

A GRAMMAR OF KODAGU

Dr. R. BALAKRISHNAN

ANNAMALAI UNIVERSITY
ANNAMALAINAGAR.

Department of Linguistics

Publication No. 52

First Edition 1977

Printed at

Ilango Press,
192, West Bouleward Road,
Pondicherry-1.

FOREWORD

Dr. Caldwell in his A COMPARATIVE GRAMMAR OF THE DRAVIDIAN OR SOUTH INDIAN FAMILY OF LANGUAGES has classified Dravidian languages into two, cultivated and uncultivated. Languages like Tulu and Kodagu belong to Caldwell's former group and the importance of the study of the so-called non-Literary languages cannot be minimised. These languages themselves are interesting to study and the study of such languages is also very important for the comparative study of Dravidian languages.

The study of Kodagu is very important from the poine of view of the culture, habits and the social attitudes of the speakers of the language. Though Kodagu does not havt any script of its own there is a vast amount of literature written in Kannada script. Besides, it has also got traditional oral literature which has to be collected and studied by linguists, sociologists and anthropologists The importance of the oral literature of the Kodavas, is very great as they are considered to be traditional warriors and this can be seen very well in their manners, dress and customs and it is reflected in their folksongs, riddles, proverbs etc. Unless we are well versed in their language it is impossible to collect such important materials and study them scientifically.

With this view, the Centre of Advanced study in Linguistics, Annamalai University has undertaken the project of studying Kodagu and analysing it linguistically. In this connection it can be mentioned that after the publication of AN ELEMENTARY GRAMMAR OF THE COORG LANGUAGE by R. A. Cole in 1867, there is no other good grammer of Kodagu available either in print or in manuscript *except that of Dr. Garman's work entitled* A GRAMMAR OF COORG LANGUAGE which was completed in 1973. The present work, A GRAMMAR OF KODAGU, is the outcome of the research done by Dr. R. Balakrishnan since 1968 when he joined as a Research Scholar in this department. This present monograph is the second in the series on Kodagu, the first being his PHONOLOGY OF KODAGU WITH VOCABULARY, which has also been published by this Centre. It is my earnest hope that these twin monographs will be very useful not only to the linguists but also to other social scientists who work on the Kodavas. I am really very happy that we are now able to publish it under the publication programme of the centre of Advanced study in Linguistics Annamalai University.

S. AGESTHIALINGOM
Director
Centre of Advanced Study in Linguistics

Annamalainagar,
21st Sep. 1977.

ACKNOWLEDGEMENTS

I owe a debt of deep sense of sincere gratitude and gratefulness to my respected Professor Dr. S. Agesthialingom, Head of the Department of Linguistics and Director, Centre of Advanced study in Linguistics, Annamalai University for having taught me not only the transformational generative grammar but also guided and helped in all ways by his constant help, invaluable guidance, personal care and encouragement which enabled me to complete this work and also for his kindness in including this work in the publication series of the Centre of Advanced Study in Linguistics, Annamalai University

It will be a pleasant experience on my part to gratefully remember the encouragement, help and suggestions offered to me by my Guru K Kushalappa Gowda, Professor and Head of the Department of Kannada, University of Madras, whenever I approached him.

I like to express my gratitude to my teachers Dr. S V. Shanmugam, Dr. N. Kumaraswami Raja, Dr. K Murugaiyan and Dr. G. Srinivasa Varma for their useful suggestions

Special mention must be made of the constant encouragement and valuable suggestions that I received from Mr. T. Edward Williams, lecturer, CAS in Linguistics, Annamalai University, from time to time. I am deeply grateful to him for his constant co-operation.

I thank my loving friends Dr. S. Sakthivel who helped me in many ways as well as Mr. P. Parathesi for preparing the press copy

I am also grateful to Mr. B. D. Ganapathy, Editor, "Kodagu", Mercara, Mr. K. A. Somanna, Home-guard Commander, Mercara and Mr. B. G. Gnanaiah, Manager, Anuradha Press, Mercara for their kind help and co-operation in collecting the data during my field trips to Coorg District

I wish to express my thanks to the authorities of the Annamalai University for having permitted me to publish this work. I am also thank the U. G. C for their liberal grants which facilitated this publication and I also thank M/S Ilango Press, Pondicherry.

R. BALAKRISHNAN

CONTENTS

FOREWORD .... iii-iv
ACKNOWLEDGEMENTS ... v-vi
INTRODUCTION ... ix-xiii
1. NOUNS ... 1-90
1. 0 Nouns ... 1
1. 1. Morphological classification 3
1. 2. Derivational suffixes ... 23
1. 3. Number suffixes ... 28
1. 4. Link-Morphs ... 30
1. 5. Cases ... 33
1. 6 Pronouns ... 42
1. 7. Numerals ... 47
1. 8. Compound Nouns ... 62

2. VERBS 92-172
2. 0. Verbs [stems] ... 91
2. 1. Transitive ... 113
2. 2. Causative ... 113
2. 3. Finite verbs ... 114
2. 3. 1. Tenses ... 114
2. 3. 2. Aorist Future ... 116
2. 3. 3. Negative ... 117
2. 3. 4. Imperatives — 119
2. 3. 5 Hortative ... 122
2. 3. 6. Permissive ... 122
2. 3. 7. Obligative ... 123
2. 3. 8. Pronominal suffixes ... 123
2. 4. Non-finite verbs ... 127
2. 4. 1. Infinitive ... 128
2. 4. 2. Simultaneative ... 129

2. 4. 3. Resultative ... 129
2. 4. 4. Conditional ... 130
2. 4. 5 Verbal participles ... 132
2. 4. 6. Relative participles ... 132
2. 5. Defective verbs .. 132
2. 6. Appellative verbs ... 137
2. 7. Compound verbs .. 143
2. 8. Participial Nouns . 151
2. 9. Derived Nouns ... 153
2. 9 1. Verbal Nouns ... 154
2. 9. 2. Derivative Nouns ... 156
2. 10. Stem Alternants ... 163
3. ADJECTIVES ... 173-182
4. ADVERBS ... 183-194
4. 0 Adverbs ... 183
4. 1 Simple Adverbs 184
4. 2. Derived Adverbs ... 186
4. 3. Compound Adverbs 194
5. PARTICLES ... 195-204
5. 0. Particles ... 195
5. 1. Nominal Post-positions ... 195
5. 2. Conjunctions ... 198
5. 3. Quotative ... 198
5 4 Interjections ... 299
5. 5. Vocative ... 200
6. CLITICS ... 205-212
7. SANDHI .. 213-238
8. SYNTAX ... 239-322
8. 0. Syntax ... 239
8. 1. Constituent structure ... 241
8. 2. Transformation ... 281
9. BIBLIOGRAPHY ... 323

INTRODUCTION

There are 23 languages that belong to Dravidian family and they are classified into three groups viz., North Dravidian, Central Dravidian and South Dravidian. Four of them are literary languages viz., Tamil, Malayalam, Kannada and Telugu and they have recorded history from the early centuries of the Christian era and are chief languages of South India. Other languages are scattered all over India with the exception of Brahui, which is spoken in a region in Pakistan. Except Telugu the other literary and non-literary languages like Kota, Toda, Kodagu, Tulu etc., belong to South Dravidian. Kodagu is spoken by Kodavas (Coorgies) having a population of about 75,000 as per the census of India, 1971 and they live in the Coorg District of Karnataka State in South India.

Sanskrit language grew into prominence subsequent to the influx of Aryans in India and it held sway over all other languages throughout India and this fact is very well reflected in the heavy borrowings of Sanskrit vocabulary in to other languages The degree of borrowing varies from language to language. Dravidian languages came into contact with Sanskrit and other languages like Prakrit from very early time. However Tamil resisted the influence of Sanskrit from the beginning, though it did borrow many cultural words. Comparatively the Kodagu language has a small number of Sanskrit words.

The Kodavas are more keen in preserving their customs and traditions. They have a cosmopolitan outlook regarding their language. Kannada is the official language and all Kodavas have to learn it out of necessity – though there is hardly any chance of two Kodavas conversing in Kannada During the British rule, English was a prestegious language and Kodavas took pride in acquiring this language and as a result one can see many English words being borrowed into Kodagu. Though Kannada is the school and official language, it is rather surprising that it is not possible to count by fingers even the number of Kodavas excelled themselves as Kannada scholars whereas the number of those excelled themselves in English is quite remarkable. However, the mother tongue though it is neglected to any extent must be regarded as a mirror reflecting many of the ancient features.

As there is no script for Kodagu of its own, the literary works of this language are written in Kannada script. The first literary works in Kodagu language is *Cauvery Purana*, a portion of *Skanda Purana*. The *Pattole Palame*, a collection of songs, written by N. Chinnappa (1924) describes their traditions, customs and their way of life.

The Kodagu language was known to philologists and missionaries even from 16th century. They considered it as a dialect of Kannada. Francis Ellis (1816) referred this as one of "the local dialect of the same derivation", which is "a variation of the Tuluva, spoken in the district called Coorg". Dr. H. Moegling (1855) stated that it is closely related to Tamil and Malayalam. Prof L. V. Ramaswami Aiyar (1926) also stated clearly in one of his articles that Kodagu language is closely connected with Tamil Malayalam. However, the relationships between Kodagu and other Dravidian Languages could be traced through some isoglosses.

1. A common innovations of the change of the Proto Dravidian *v- > b- in the initial position is a shared innovation in Kodagu, Kannada and Tulu.

PDr.	Kodagu	Kannada	Tulu	
va:y	*ba:y*	*ba:yi*	*ba:yi*	mouth
va:ḷai	*ba:ḷe*	*ba:ḷe*	*ba:ḷe*	plantain, etc

2. Except Tamil and Malayalam all the other South Dravidian languages retain the initial Proto *k- before front vowels

PDr.	Kodagu	Kannada	Tamil	Malayalam	
key	*key*	*key*	*cey*	*cey*	to do
kevi	*kemi*	*kemi*	*cevi*	*cevi*	ear, etc.

3. Kodagu shares with Kannada a striking feature involving two verbs

Egs.

Kodagu

bu:ḷ-	*budd-*	to fall
ë:ḷ-	*edd-*	to rise

Kannada

bi:ḻ-	*biḻd-/bidd-*	to fall
e:ḻ-	*eḻd-/edd-*	to rise

Even though some of the isoglosses, that have been very closely related to Kannada, a number of them show its affinity towards Tamil and Malayalam.

i. Kodagu like old Tamil, but unlike the other SDr. languages, retains the negative marker *-a* with the verbal stem.

Old Tamil	Kodagu	
o:ḷ-a	*o:ḍ-a*	will not run
naṭakk-a	*naḍak-a*	will not walk, etc.

ii. Kodagu shares with old Tamil, the small verb class of shape CVy- with the past tense marker **-t-*.

Old Tamil	Kodagu	
cey-t-	*kejj-[key-d]*	to do
ney-t	*ŋejj- [ne:y-d]*	to spin, etc.

iii. Like Tamil-Malayalam, Kodagu has also a common verb class with *-nt-* as past tense marker and *-p-* as the future tense marker.

Tamil	Kodagu	
naṭa-nt-	*naḍa-nd-*	walked
naṭa-pp-	*naḍa-p-*	will walk, etc.

iv. The transitive suffixes found in Kodagu are also connected closely to Tamil.

Tamil		Kodagu		
Intransitive	Transitive	Intransitive	Transitive	
naṭa-	*naṭa-t-*	*naḍa-*	*naḍa-t-*	celebrate
uru-	*uru-k-*	*urï-*	*urï-k-*	melt
muṅk-	*mukk-*	*muṅṅ*	*mukk-*	immerse
piri-ñc-	*piri-c-*	*piri-ñj-*	*piri-c-*	disperse, etc,

From the above discussion it can be concluded that Kodagu language is connected more closely to Tamil-Malayalam than Kannada and also the Kodagu language retains many archaic features of old Tamil.

Robert Caldwell (1856) has mentioned about Kodagu language and its grammar. A grammar of Kodagu was written by Cap. Rob Cole in 1867 and that had been out of print since long. Later some specimens of Kodava songs with the epitome of the grammar were published by Rev. A. Graeter (1870) of Mangalore. But all works regarding Kodagu language grammar have not given complete description of the language. Recently Dr. M. A. Garman (1973) has worked on Kodagu language and has written his dissertation, *A Grammar of Coorg Language* at the University of Edinburgh. None of the older accounts of Kodagu language have anything in detail on the matter of the grammar.

The present book *A Grammar of Kodagu* is a part of *A Descriptive Grammar of Kodagu language*, a thesis submitted for Ph D. in the Annamalai University in 1975. It is based on the data collected by the author during his field trips to Coorg District from 1968 to 1974. Anthropological study of Kodavas and the relevant Phonological features as well as the whole vocabulary of Kodagu language are found in the book *Phonology of Kodagu With Vocabulary* of same author published by the Annamalai University. This book includes Nouns, Verbs, Adjectives, Adverbs, Particles, Clitics, Sandhi and Syntax of this language.

1. NOUNS

1. 0. Nouns are defined as those which are inflected with case and number markers. These nouns can be broadly classified into various categories.

In Kodagu, the gender-number (GN) distinction is found only in the demonstrative pronoun (D P N) but not in finite verb (FV) as in the case of Tamil. Finite verb forms show only person distinction

egs.	*bandë*	I came
	ba:tï	we came

bandiya	you (sg.) came
bandira	you (pl.) came
ba:tï	he/she/it/they came

There are four-fold distinction in DPN viz., (1) masculine singular (2) feminine singular (3) epicene plural and (4) neuter singular.

egs.	1. *avën*	he
	2. *ava*	she
	3. *ayṅga / avu*	they
	4. *adï*	it

Unlike Tamil we find a type of concord between the numeral appellative nouns and the nouns they are in construction with each other. For example *obbë* means 'one man' and this is in construction with nouns like *kiṇṇë* 'boy' *manśë* 'man' etc., and they form a noun phrase like

obbë kiṇṇë	a boy
obbë manśe	one man

This kind of noun phrases can be found in languages like Kannada, Tulu, Konda, Gondi, Koya, Kolami, Parji and Gadaba (Shanmugam 1791:12). The following are Kodagu examples:

1. *obbë kiṇṇë*	one man – boy
2. *obba mu:ḍi*	one woman – lady
3. *ondï mara*	one thing – tree
4. *mu:va a:ḷa* (*mu:ndï a:ḷa*)	three persons – servants

5. *ayva mu:ḍiya* five persons – girls
(*añji mu:ḍiya*)
6. *daṇḍï to:ṭa* two things – gardens

There is also another type of construction, where the noun is the first constituent and the appellative form of numeral is the second. This type of construction can be found in other South Dravidian languages also.

1. *ba:lë obbë* young person – one man
2. *mu:ḍi obba* girl – one person
3 *mara ondï* tree – one thing
4. *kïṇṇëṅga/poṅga daṇḍa:ḷï* boys/ladies – two persons
5. *mara daṇḍï* trees - two things

The numeral appellative nouns show the difference between human and non-human nouns as well as the gender distinction in the singular nouns.

Taking all these into consideration all the Kodagu nouns can be broadly classified into two major categories viz: 1. Human (Hum.) and 2. Non-human (N.Hum.) which is reflected with interrogative pronoun.

1. *i: kïṇṇe da:rï* who is this boy
2. *ī: mu:ḍi da:rï* who is this girl
3. *i: mara ennï* what is this tree

The human plural nouns and the non-human plural nouns can be distinguished in another way also, that is by substituting the appellative form of numeral nouns.

1. *aṇṇëṅga daṇḍa:ḷi* elder brothers – two

2. *akkĕṅga daṇḍa:ḷï*	elder sisters - two
3. *pu:ñeya daṇḍï*	cats - two
4. *mane daṇḍï*	houses - two

are grammatical, but not the following

* 1. *pu:ñeya daṇḍa:ḷï*

2. *mane daṇḍa:ḷï.*

Here *daṇḍa:ḷï* is substituted only for human nouns.

Human nouns are classified further into human common (Hc) and human proper (Hp). This distinction is made only on the basis of taking plural marker and honorific marker. Hp will optionally take honorific marker whereas Hc will optionally take plural. Further classification. will come under the morphological classification.

The non-human nouns can be classified into animate and inanimate nouns on the basis of number markers. Plural marker is obligatory in the case of animate nouns. Consider the following examples,

1. *orï pu:ñe*	one cat
2. *daṇḍï pu:ñeya*	two cats
3. *orï mane*	one house
and 4. *daṇḍï mane*	two houses

Though there is syntactic significance in the classification of non-human nouns as count noun, proper noun, mass noun etc., they are not attempted here as they are discussed under syntax.

Thus the noun classes mentioned above can be shown diagrammatically as below:

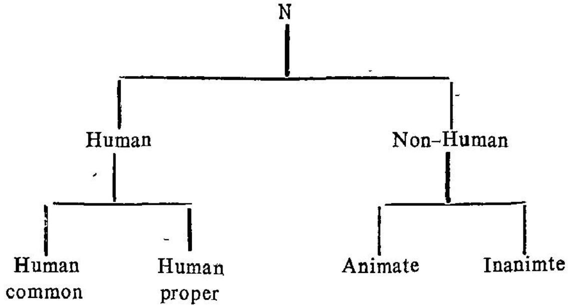

1.1. MORPHOLOGICAL CLASSIFICATION

As we have seen the syntactical classification of nouns in the previous section (1.0) Kodagu nouns are divided into four sub-classes viz: (i) Human common nouns, (ii) Human proper nouns, (iii) Animate nouns, and (iv) Inanimate nouns In addition to this classification, a kind of morphological classification is also necessary to describe the morphemes like the gender, number etc.

1.1.1. Human Common Nouns (H C)

Human common nouns are mainly divided into (i) derived nouns and (ii) simple nouns. In this connection it should be pointed out that Caldwell (1956.223) has classified the nouns into appellatives which have the gender terminations and substantives (which have no formation of gender) According to Caldwell the derived nouns include only the nouns which have the gender terminations. But

in Kodagu two other sets viz: (1) pronouns, which are derived from the bases of first and second person by adding the number markers and (2) numeral appellative nouns which are derived from the numeral bases and gender-number markers, are also included as derived nouns.

1.1.1.1. Derived Nouns (D N)

The nouns derived from verbal bases (participial and verbal nouns) are not taken up here but they are treated under verb (§ 2). What follows is the treatment of nouns derived from other bases. There are four classes of derived nouns in Kodagu.

1. Nouns derived from the first and second person and the reflexive bases plus number markers.

2. Nouns derived from the nominal bases (free forms) plus the agentive markers.

3. Nouns derived from the numeral appellative bases plus gender-number markers.

4. Nouns derived from noun bases (bound as well as free forms) by adding the gender-number markers.

D.N.1. Stems for the derived nouns of the first class belong to this group. These stems are further classified into two on the basis of number markers.

D.N.1.1 Stems which can take the singular marker

na:- 1st person

ni:– IInd person
ta:– Reflexive

D.N.1.2. Stems which can take the plural marker *-kaḷ*.

nan- Ist person
nin- IInd person
tan- Reflexive

D.N. 2. Stems for the derived nouns of the nominal bases plus the agentive marker belong to this class. These stems are divided into three sets.

D.N.2.1. Stems which can take the agentive marker *-i* belong to this class.

aññа:na	ignorance
annada:na	giving away food in charity
abima:na	sense of honour
upaka:ra	help
kru:ra	cruel
ña:na	knowledge
paro:paka:ra	philanthropy
pa:pa	sin
ru:pa	shape
vya:pa:ra	sales
vro:da	enmity
śayaro:ga	a disease

D.N.2.2. Stems which can take the agentive marker *–va:si*

gra:ma	village
sada:	always

D.N.2.3: Stems which can take the agentive marker *–sa:li*

ba:gya	wealth, luck
buddi	wisdom

D.N.3. Stems for the derived nouns of the numeral appellative bases plus gender number markers belong to this class. These stems are divided into two sets.

D.N·3.1. Those stems which can take the masculine singular *–vën* and feminine singular *–vaḷ* alone belong to this set. Only one base belong to this set.

or-	one

D.N.3.2. Those stems which can take the epicene plural *–var* belong to this set. This includes only the numeral appellative nouns from two to seven.

ir-	two
mu:-	three
na:-	four
ay-	five
aru-	six
ë:ḷ-	seven

D.N.4. Stems for the derived nouns of stem plus gender-number markers belong to this class. The stems can either be the abstract or the verbal derivatives. Most of these stems can have maximum three forms viz., masculine,

feminine, neuter singular and epicene plural. On the basis of the masculine singular markers, which are added to these stems, they can be further sub-divided into four sets.

D.N.4.1. Stems, which can take the masculine singular *-vĕn*, the feminine singular *-vaḷ*, the epicene plural *-yengaḷ /-yen-/-vu* and the neuter singular *-dĭ/-ϕ-* belong to this set.

a-/a:-	that
i-/i:	this
e:-	which

D.N.4.2. Stems which can take the masculine singular *-ka:rĕn* and feminine singular *-karti* belong to this set.

aḍige	cooking
a:ṭa	dance
oḍe	ownership
ba:le	youth
bo:ja	beauty
mane	house
ma:ya	illusion
munḍi	paramour
mo:ḍi	jugglar
va:ra	rent
ve:sa	dwelling

D.N.4.3. Stems which can take the masculine singular marker *-ϕ* and the feminine singular *-ci* belong to this set.

ayri	male of Ayri caste
koṅgiṇi	male of Kongini caste
ko:maṭi	man of Komati caste
tukki	sorrowful man
to:ṭi	scavenger (masc.)
daḷḷa:ḷi	male broker
na:yarï	man of Nayar caste
puḍa:ri	an improper man
puliya:ḍi	adulteror (man)
ma:pḷe	man of Maple caste
mukka:ṭi	man of Mukkati caste

D.N.4.4. Stems which can take the masculine singular marker *-ën* belong to this set. This set can also be subdivided on the basis of taking the feminine singular marker and the common epicene plural marker.

D.N.4.4.1. Stems which can take the masculine singular *ën* and feminine singular *-aḷ* belong to this set.

kaṇḍav-	stranger male / female
koṇḍav-	husband / wife
kïrïmo:v-	grand-son / -daughter
madam-	male / female cross cousin
maym-	son / daughter-in-law
mommo:v-	grandson / daughter
mo:y-	son / daughter

D.N.4.4.2. Stems which can take the masculine singular *-ën* and the feminine singular marker *-aci* belong to this set.

erap-	beggar male/female
cu:ḷ-	immoral man/woman
na:yind-	man or woman of Barbar caste.

D.N.4.4.3. Stems which can take the masculine singular marker *-ën* and the feminine singular marker *-i* belong to this set.

ajj-	grand-father/mother
kuma:r-	grown up boy/girl
tamma:v-	aunt/uncle
toṇḍ-	aged man/woman
daḍḍ-	dull man/woman
da t-	generous man/woman
pi:t-	left handed man/woman
pukkil-	coward (man/woman)
boḍḍ-	impotent (man/woman)
macciṇ-	younger brother/sister-in-law
ma:de:v-	God/Goddess
ma.v-	father or mother-in-law
mukk-	aged man/woman
muttajj-	great grandfather/mother
sva.rtat-	selfish man/woman
śakt-	strong man/woman

D.N.4.4.4. Stems which can take the masculine singular marker *-ën*, feminine singular marker *-i* and the epicene plural marker *-aḷ* belong to this set.

ejama:n-	ownership
kaḷḷ-	theft
kiyḍ-	deaf-muteness
kunṭ-	lameness
kurïḍ-	blind
kuḷḷ-	short
ku:r-	dwarf
gu:n-	hunch back
de:v-	God/Goddess
ni:c-	vile
pa:tak-	heinous, crime
pucc-	madness
punḍ-	mischievous
putr-	son/daughter
buddivant-	wisdom
manïś-	manlyness
mudïk-	aged
me:d-	Mada caste
ra:kṣaś-	giant
vidya.vant-	educated
satyavant-	truthful
sukiy-	healthy
sne:hit-	friendship

D.N.4.4.5. Stems which can take the masculine singular *-ën*, the feminine singular *-ati* and epicene plural marker *-aḷ*

amm-	Amma Coorg caste

uda:r–	generous
erav–	Erava caste
okkelig–	Okkaliga caste
oḍev–	Master/God
oḍḍ–	Odda caste
kaṇiy–	Kaniya caste
kuḍiy–	Kudiya caste
kumba:r–	Kumbara caste
kurub–	Kuruba caste
koḍav–	Kodava caste
korm–	monkey player caste
koll–	Blacksmith caste
gavḍ–	Gowda caste
goll–	cultivator caste
gëṭṭig–	ability
ca:liy–	Chaliya caste
je:nïkurub–	Jenu Kuruba caste
taṭṭ–	Goldsmith caste
ti:y–	Tiya caste
turïk–	Muslim caste
na:ṭ–	country man/woman
paṭṭ–	Brahmin caste
paṇık–	Panika caste
paṇiy–	Paniya caste
pa:l–	Pale caste
poliy–	Poliya caste
poley–	Poleya caste
baḍav–	poor

baḍuv-	Baduva caste
baṇḍ-	shameless
baṇṇ-	Banna caste
bamb-	mischievous
baymb-	heroism
beṭṭa kurub-	Betta Kuruba caste
maḍiva:ḷ-	Washer man caste
ma:ḍig-	Madiga caste
ma:ra:y-	Drum-beater caste
mukkuv-	Mukkuva caste
muḍav-	lame
mu:g-	dumb
mu:ḍ-	foolish
mu:p-	aged
moḍav-	lame
sa:mart-	able

1.1.1.2. **Simple Nouns** (S N)

Nouns which have no overt markers of gender are grouped under simple nouns. These nouns are divided into two groups on the basis of the plural markers they take.

S.N.1. Nouns which can take the common plural marker *-kaḷ* belong to this group.

akkën	elder sister
aṅgën	head man among Harijans
accutën	astrologer
aḍiyën	devotee

aṇṇën	elder brother
appėn	father
ayyën	father's brother
aruvën	family friend
avvėn	mother
a:ca:ryën	spiritual preceptor
a:dën	master
a:yėn	administrator
illavën	man who is relative
u:ritakkën	village headman
ettaka:ren	herd man
ettïka:rėn	herd man
ka:ylastën	diseased man
ka:roṇëṇ	ancestor
ka:vika:rën	temple protector
kuññappën	father's younger brother
kuññavvėn	mother's younger sister
kombën	man of skill
koleka:rėn	murderer
ko:laka:rën	man who makes decoration
kikkerën	junior male member of a house
kïṇṇėn	boy
kṣatriyën	man of Kshatriya caste
gula:mën	slave
grihastën	house holder
cavraka:rėn	barber
cittapėn	uncle

takkën	head man of a village
tammaṇën	younger brother
ta:tën	grandfather
daḷaba:yën	commander in an army
di:rën	variant person
du:tën	messenger
de:vatakkën	head man of a temple
dombën	astrologer
na:yakèn	leader
na:riba:yën	bad mouthed man
pageyën	enemy
pappën	father
pa:lakën	young boy
pu:dën	a deity
poṇ	wife
praya:ṇikën	passenger
prohitën	priest
bagaṇḍën	a sage
bagavantën	God
bala akkën	step sister (elder)
bala aṇṇèn	step brother (elder)
bala tammaṇën	step brother (younger)
balliyappën	father's elder brother
balliyavvën	mother's elder sister
ba:yën	talkative person
ba:lën	youngster
ba:vën	elder male cross-cousin
ba:ḷuvën	king

billeka:rën	hunter
bi:rën	warrior
bo:javvën	mother's younger sister
mannën	king
mammën	elder sister-in-law
ma:tën	mother
ma:lavën	man
mitthren	friend
yuvaṛa:jën	prince
rakkasën	giant (male)
raytèn	farmer
vamśaka:rën	descendents
vayasen	aged man
vi:rèn	warrior
satputrën	virtuous son
sammandikën	kinsman
se:na:tipèn	commander of an army
se vakën	soldier
so:rèn	adulteror
śandiyën	best man
śa:ndika:rèn	temple priest
śiṣyën	disciple
haja:mën	barber
ho:darèn	brother

S.N 2. Nouns which can take the common plural marker *-aḷ* belong to this group.

aḍiya:ḷ	slave

atikaprasaṅgi	one who talks rudely
aditi	mother of all Gods
ana:te	orphan
a:ṇa:ḷ	man
o:le a:ḷ	messenger
kanni	virgin
kaymak-	small child
karti	housewife
kavi	poet
ka:ri	mischievous man
karoṇajji	wife of ancestor
koḍiya:ḷ	leader of a marriage group
koḍīci	talkative woman
koṇici	pretended lady
kodi kuññi	pet son
ko:ḍe kaṇṇi	woman who has warp eye
kru:pi	ugly man or woman
caṅṅa:di	friend
caḍati	other's wife
caṇḍa:ḷ	low caste man
ca:ṇḍa:ḷ	low caste man
ca:mi	Brahmin (man)
ciṅga:ri	a woman who does too much decoration for her beauty
cu:ḷe	dancing girl
taṅge	younger sister
taccayri	carpenter
tacca:ri	carpenter

tavndari	handsome people
ṭavnda:ri	handsome people
ta:yi	mother
toḍapajji	wife of ancestor
danavandari	wealthy lady
darma prabu	munificient person
duba:ri	useless man
paḍeya:ḷ	warrior
pati	leader/husband
pativrate	virtuous wife
patni	chaste wife
pa:lini	lady who protects
pa:vi	sinner
puṇyavati	woman of great religious merit
poṇṇa:ḷ	woman
pommak-	girl
porambaḍi	excommunicate man/woman
porīki	beggar
prabu	noble man
bala taṅge	step sister (younger)
bika:ri	man who is having astention
bendī	relative
makk-	son/daughter
marimakk-	grand child
muṭṭa:ḷ	foolish fellow
mutta:yi	grand mother
mu:de:vi	extravagant woman

mu:lakanni	virgin
mo:ci	cobbler
mo:hini	infatuating damsel
yo:ṡi	unmarried girl
ra:ṇi	queen
r̄iṣi	sage
vidave	widow
vidya:rti	teacher
saki	confidant
sacipati	leader of heaven
sanyasi	one who has renounced worldly affairs
sa:du	good virtuous person
sippa:yi	sepoy
sumaṅgali	married woman
so:ḍalajji	wife of ancestor
so:ma:ri	lazy fellow
sva:mī	God
ṡatrï	enemy
he:ḍi	man who is a coward

1.1.2. **Human Proper Nouns (HP)**

Human proper nouns include only personal names, which can be divided into masculine and feminine.

1.1.2.1. Masculine

kariyappën	Kariappan
gaṇapati	Ganapathy
so:maṇṇën	Somanna

na:ṇayyën	Gnanayya
ka:ḷappën	Kallappa
etc.,	

1.1.2.2. Feminine

egs.	*si:ta*	Sita
	ka:ve:rammën	Keveramma
	de:vi	Devi
	kannika	Kannika
	etc.,	

1.1.3. **Animate Nouns (AN)**

These nouns are also divided into two groups on the basis of different plural markers they take.

A.N.1. Nouns which can take the plural marker *-kaḷ* belong to this group.

egs.	*kaḍamën*	stag, wild deer
	kurkën	jackal
	ke:mën	barking deer
	ko:ḍen	monkey
	toḷën	wolf
	mallën	cock
	etc.,	

A.N.2. Nouns which can take the plural marker *-aḷ* belong to this group.

egs.	*aṭṭe*	leech
	attaḷ	cattle
	a:ne	elephant

eli	rat
oṇṭe	camel
katte	donkey
payyu	cow
pu:ñe	cat
na:yi	dog

etc,.

1.1.4. Inanimate Nouns (IAN)

The inanimate nouns take neither gender nor number markers. The syntactical classification of these nouns is dealt in the chapter Syntax.

egs.	*ka:ve:ri*	River Cauvery
	to:ṭa	garden
	paṇa	money
	paṇi	work
	ba:ḷe	plantain
	bi:di	street
	maḍike:ri	Mercara (a place)
	mane	house
	mara	tree
	me:ji	table
	ya:ka	seed-bed
	ro:ma	body hair
	lañca	bribe

etc.,

1.2 DERIVATIONAL SUFFIXES

There are two types of derivational suffixes in Kodagu, viz, 1. Agentive and 2. Gender-number and these are added to nominal or appellative bases in nouns. When these suffixes are added, certain santhi changes take place in stem-final syllables, which can be taken care of by santhi rules (§.7).

The sandhi rule that governs the change is referred against the word in the following sections for easy reference.

1.2.1. Agentive

It has three markers viz., *i*, *–va:si* and *-sa:li* which are suffixed to the stems of different classes (D.N.2.1), (D.N.2.2) and (D.N.2.3) respectively.

upaka·ra-i >*upaka:ri*	helper	(S.39)
pa:pa-i > *pa:pi*	sinner	(,,)
vya:pa:ra–i >*vya:pa:ri*	merchant	(,,)
gra:ma-va:si	village inhabitants	
sada:-va si	permanent dweller	
buddi-sa·li	wise man or wise woman	
ba:gya-sa:li	lucky man or woman	

1.2.2. Gender-number

As already noted there are four genders in Kodagu viz. (i) masculine, (ii) feminine, (iii) (epicene) plural and (iv) neuter. Since the complete set of bases has been given in the previous section (1.1), only examples are given under each category in the following.

1.2.2.1. Masculine

In Kodagu, there are four masculine suffixes viz, *-ën*, *vën*, *-ϕ* and *ka:rèn*, which occur with the stems of different classes of nouns, (D.N.4.4.5), (D.N.4.4.1), (D.N.4.1), (D.N.3.1), (D.N.4.3) and (D.N.4 2.) (For complete list, see 1.1.1.1.)

egs.	*ajjën >ajjè*	grand father (S.38)
	erap–ën >erapë	beggar (S.38)
	kaḷḷ–èn >kaḷḷè	male thief
	kurïb-èn >kuribè	Kuruba caste man (S.38)
	tamma:vën	mother's brother
	kaṇiyèn	diviner
	koḍav-ën	Kodava man
	or-vën >obbè	one man (S. 15, 16, 21; & 38)
	a–vën	he-that
	i-vèn	he-this
	ayri-ϕ	Ayri caste man
	to:ṭi-ϕ	Scavenger caste man
	puliya:ḍi-ϕ	adulteror (male)
	aḍige-ka:rën >aḍigeka:rë	male cook
	a:ṭa-ka:rèn >a:ṭaka:rë	male dancer
	bo:ja–ka:rèn >bo:jaka:rë	best man

1.2.2.2. Feminine

Feminine is denoted by seven suffixes viz., *-aḷ*, *-vaḷ*, *-ati*, *-aci*, *-ci*, *-i*, and *-karti* and these suffixes are added with the

stems of noun classes, (D.N.4.4.1); (D.N.3.1); (D.N.4.1); (D.N.4.4 5); (D.N.4.4.2); (D.N.4.3); (D.N.4.4.3), (D.N.4.4.4.) and (D.N.4.2). (For complete list see 1·1.1.1).

egs.	*madam-aḷ >madama*	female cross cousin (S.8)
	maym-aḷ > mayma	daughter-in-law (S.8)
	mo:v-aḷ >mo:va	daughter (S.8)
	or-vaḷ >obba	one woman (S.8,15,16&21)
	a-vaḷ >ava	she-that (S.8)
	i-vaḷ >iva	she-this (S.8)
	amm-ati	Amma-Coorg woman
	koḍav-ati	Kodava woman
	gavḍ-ati	Gowda woman
	erap–aci	female beggar
	cu·ḷ-aci	immoral woman
	ma·pḷe-aci >ma:pḷaci	Maple caste woman (S. 39)
	ayri-ci	Ayri caste woman
	to:ṭi-ci	female scavenger
	puliya:ḍı-ci	adulteror (female)
	ajj-i	grand mother
	kaḷḷ–i	thief (female)
	mudïk–i	aged woman
	aḍige-karti	female cook
	a:ṭa-karti	female dancer
	bo ja-karti	best woman

1.2.2.3. Plural

There are two kinds of plurals viz; (a) epicene plural and (b) common plural, the former occurs with the stems which are common for both males and females and the latter occurs with masculine and feminine and other animate nouns. The nouns of masculine and feminine may be either derived or simple, as has already been shown in the section (1.1).

1.2.2.3.1. Epicene plural

There are five suffixes viz. *-aḷ*, *-var*, *-yeṅgaḷ*, *-yen* and *-vu* denoting epicene plural. Of these *-yeṅgaḷ*, *-yen* and *-vu* are added to the stems of class (D.N.4.1) only and remaining suffixes are affixed with the stems of classes (D.N.4.4.4.), (D.N.4.4.5.) and (D.N.3.2.). (See § 1.1.1.1.)

egs.	*a-yeṅgaḷ >ayṅga*	they-that (S.8 & 41)
	a-yeṅgaḷ-ḍa >ayṅgaḍı	their (Gen.) (S.8 & 41)
	a-yen-a >āyna	they (Acc.) (S.41)
	ā-vu	they-that
	i-vu	they-this
	kaḷḷ-aḷ >kaḷḷa	thieves (S.8)
	koḍavaḷ-a	Kodavas (Acc.)
	ir-var >ibba	two persons (S.15,16 & 21)
	mu:-var-a	three persons (Acc.)

It is also to be noted that the epicene plural markers *-yeṅgaḷ* and *-yen-* are added to denote honorific singular in Kodagu.

egs.	*ayeṅgal* >*ayṅga*	he/she (Hon. Sg.) (S. 8 & 41)
	a-yen-a >*ayna*	he/she (Acc.) (S. 41)

1.2.2.3.2. Common plural

There are two common plural markers in Kodagu viz, *-kaḷ* and *-aḷ*. Of these, *-kaḷ* is not only added to the stems of classes (D. N. 2. 1.) and (A. N. 1), but also to the masculine singular markers *-ka:rën* and *-ën*; and *-aḷ* is added to nouns ending with feminine markers (except *-vaḷ*) and the stems of classes (D. N. 2. 1.) and (A. N. 2.)

egs.	*akkën-kaḷ* >*akkëṅga*	sisters (S.8,22 & 23)
	appën-kaḷ >*appëṅga*	fathers (,,)
	to:ḷën-kaḷ >*to:ḷëṅga*	wolfs (,,)
	a:ṭaka:rën-kaḷ >*a:ṭaka:rëṅga*	dancers (masc.) (S.8,22 & 23)
	erapën-kaḷ >*erapëṅga*	beggars (,,)
	a.ṭakarti-aḷ >*a:ṭakartiya*	dancers (fem.) (S.8 & 30)
	maymaḷ-aḷ >*maymaḷa*	daughter-in-laws (S 8)
	ajji-aḷ >*ajjiya*	grand-mothers (S.8 & 30)
	koḍavati-aḷ >*koḍavatiya*	Kodava women (,,)
	aḍiya:ḷ-aḷ >*aḍiya:ḷa*	slaves (S. 8.)

ana:ṭe–aḷ	
>ana:ṭeya	orphans (S.8 & 30)
aṭṭe–aḷ >aṭṭeya	leeches (,,)
attaḷ–aḷ >attaḷa	cattle (S. 8.)

1.2.2.4. Neuter

There is no separate suffix for the neuter singular as well as the neuter plural; however in the case of the demonstrative and the interrogative pronouns *–dï* is overtly used to denote singular. In addition to this, -ϕ– marker can also be considered as a suffix when the demonstrative bases *a:–* and *i:–* are inflected with the inflectional increment *–n–*.

egs.	*a–dï*	that–it
	a–dï-na	that (Acc.)
	i-dï-na	this (Acc.)
	a:–ϕ–na	that (Acc.)
	i:-ϕ–na	this (Acc.)

1.3 NUMBER SUFFIXES

In Kodagu, singular plural contrast is found only in the first person, the second person and reflexive pronouns.

1.3.1. Singular

Singular is identified by the suffix *-n* in the first person, the second person and the reflexive pronouns and this suffix is unmarked when the stems of the class (D. N. 1) are followed by case markers.

egs.	*na:-n >na:nï*	I	(S. 28.)
	ni:-n >ni:nï	you	(,,)
	ta:-n >ta:nï	oneself	(,,)
	nan-a >nanna	I (Acc.)	(S. 21)
	nin-a >ninna	you (Acc.)	(,,)
	tan-a >tanna	oneself (Acc.)	(,,)
	na:-kï	to me (Dat.)	
	na:-ḍa	my (Gen.)	
	ni:-kï	to you (Dat.)	
	ni:-ḍa	your (Gen.)	
	ta:-kï	to oneself (Dat.)	
	ta:-ḍa	of oneself (Gen.)	

Here is to be noted that the suffix *-kaḷ* is affixed with the second person stem *nin-* for denoting honorific singular in Kodagu.

eg. *nin-kaḷ >niṅga* you (Hon. Sg.) (S 8,22&23.)

1. 3. 2. **Plural**

The marker *-kaḷ* is suffixed with the stems of class (D.N 1.2,).

egs.	*nan-kaḷ >naṅga*	we	(S 8,22&23.)
	nin-kaḷ >niṅga	you (pl.)	(,,)
	tan-kaḷ taṅga	themselves	(,,)

As in other Dravidian languages like Tamil, Malayalam, Kannada. Telugu, Tulu etc., the inclusive and the exclusive plural contrast in the first person pronoun is not

made in Kodagu, but we find that there is a form *eṅgaḷ* 'we' The existence of the two forms viz., *nāṅgaḷ* and *eṅgaḷ* suggests that there might have been this distinction in the early period of Kodagu and now they have fallen together as it happened in modern Kannada.

1.4. LINK-MORPHS

Link-morph is the one which helps to make construction possible between two morphemes i.e., free morpheme + bound morpheme or free morpheme + free morpheme, which does not have any lexical meaning like others. This is known by various names like (1) inflectional increments, introduced by Caldwell (1956·259), like (2) augments taken by Ramaswamy Ayyar and like (3) empty morphs, by some modern linguists (Shanmugam Pillai, 1964·105-7 and Kumaraswamy Raja, 1970: 41–48).

As in other Dravidian languages like Tamil Malayalam, Kannaḍa etc., certain nouns have two alternants in Kodagu, one before case suffixes and other elsewhere. As the oblique form of the noun is the inflectional base the suffixes that form the oblique base are taken here as Link-morphs.

There are six markers viz., *-t-*, *-tn-*, *-n-*, *-ḍ-*, *-k-* and *-a.n-*, identified as link-morphs in Kodagu.

1.4.1. *-t-* occurs between neuter nouns ending in *-a-* and the sociative case marker *-o:ḍe* and the case markers, beginning with consonants. Before the dative marker *-kï* this occurs optionally.

egs.	*baya-t-o:ḍe*	with fear (Soc.)
	mara-t-ra	of the trees (Gen.)
	mara-t-li	in the tree (Loc.)
	mara-ki	to the tree (Dat.)
	mara-t-kī	
	>maraṅkī	to the tree (Dat.) (S. 28)

1.4.2. *-tn-* is also found between the neuter nouns ending in *-a* and the accusative case marker *- a* and the instrumental case marker *- oṇḍī.*

ku:ṭa-tn-a	the crowd (Acc.)
mara-tn-oṇḍī	by the trees (Inst.)

1.4.3 *-n-* occurs (1) after the pronouns *adī / a:, idī / i:* and *edī / e:* when these are followed by all case markers except the locative marker *-li* and (2) between other nouns ending in vowels other than *- a* and the accusative case marker *-a* and the instrumental case marker *-oṇḍi*

egs.	*adi-n-a*	that (Acc.)
	a:-n-a	that (Acc.)
	adi-n-ki	
	> a.daṅgī	to that (Dat.) (S.22,23 & 26)
	a:-n- ki >aṅgi	to that (Dat) (S.22 & 23)
	adi-n-kiñji	
	>a:dīṅgiñji	than that (Comp.) (S.22 & 23)
	a:-n-ka.ytï	
	>a:ṅga:ytï	for that (Purp.) (S.22 & 23)
	mane-n-a	the house (Acc.)
	katti-n-oṇḍī	by knife (Inst.)
	payyu-n-a	the cow (Acc.)

1.4.4. *-ḍ-* occurs only after the pronouns, human nouns and animate nouns when they are followed by the ablative case marker *-alliñji* and the locative case marker *-alli.*

egs.	*na:-ḍ-alliñji*	from me (Abl.)
	ni:ḍ-alli	with you (Loc.)
	avën-ḍ-alliñji	
	>aveṇḍalliñji	from him (Abl.) (S.23)
	avaḷ-ḍalli	
	>avaḍalli	with her (Loc.) (S.8)
	adïn-ḍ-alli	
	>adiṇḍalli	in that (Loc.) (S.23)
	payyu-ḍ-alliñji	from cow (Abl.)

1.4 5. *-k-* is conditioned by the purposive and comparative case markers. Wherever we find these two case markers this empty morph must be preceding those markers.

egs.	*ajji-k-a:yti*	for grandmother (Purp.)
	adï-n-k-a:yti	
	>adaṅga:yti	for that (Purp.) (S.22,23 & 26)
	mara-k-iñji	than the tree (Comp.)

I.4.6. *-a:ṇ-* occurs after the numerals and verbal nouns formed by the suffix *-pë/-vë* when they are followed by the case markers of accusative case, dative case and genitive case.

egs.	*ond-a:n-a*	one (Acc.)
	mu:nd-a:n-kï	
	>mu:nda:ṅgï	to three (Dat.) (S.22 & 23)
	nu:r-a:n-ḍa	
	>nu:ra:ṇḍa	of hundred (Gen.) (S.23)

1.5. CASES

Cases are those which establish some kind of relationship between nouns and other word classes in an utterance, particularly the verb. There are ten cases in Kodagu, viz., nominative, accusative, instrumental, sociative, dative, ablative, genitive, locative, comparative and purposive. All the cases except the nominative have separate markers which help us to identify the particular case in a sentence. As the case suffixes are added to the oblique forms of noun, these suffixes are to be treated as case markers.

All the cases except genitive are casals showing the relation between noun and verb in a sentence and sc they are treated here prior to that of the genitive construction.

1.5.1. Nominative

As already noted the nominative in Kodagu is unmarked. Syntactically the nominative functions as subject. Morphologically there are some adverbial nouns (*na:ḷe* 'tomorrow', *indi* 'today', *oḷï* 'inside', *aḍi* 'under' etc.) which are inflected only with the dative case marker *-kï*, the locative case marker *-li* and the ablative marker *-iñji*. *-kï* occurs only after the time indicating adverbial nouns and these three (*-kï*, *-li* and *-iñji*) can occur after the location adverbial nouns.

egs.	*na:ḷe-ki*	tomorrow
	indi-kï > *inde:ki*	today (S.47)
	oḷi-kï	towards
	oḷï-li	inside

oḷï-liñji from inside

Syntactically these adverbial nouns are all adverbials as they modify a verb or adjective or another adverb. So if a noun can be distinguished for number-gender or countable that can function as subject in the nominative case (Krishnamurti, 1969:248).

1.5.2. Accusative

The accusative suffix is *-a*. This suffix is obligatory in animate nouns and in inanimate nouns it is optional like any other Dravidian languages.

egs. *kiṇṇën-a* boy (Acc.)

payyū-na cow (Acc)

ni:nï manena këṭṭiya or *ni:nï mane keṭṭiya* } you built a house

1.5.3. Instrumental

The instrumental case marker is *-oṇḍi*. This marker can be easily connected with the free form *koṇḍi*, the past participle of *koḷ-* 'to have' - on the basis of phonetic similarily and semantic congruity between them.

However syntactically, it is necessary to have instrumental case where the case function is maintained by past adverbial participle *koṇḍï* + a verb. Therefore it is to say that in Kodagu there are two types of instrumental case constructions viz., (1) morphological and (2) periphrastic.

(1) If the suffix *-oṇḍi* occurs immediately after the oblique base it is called morphological construction.

eg. *avën kattin-ondï kettici*

He cut with knife

and (2) if *kondï* occurs after an accusative case inflected noun it is called periphrastic construction.

eg. *avën kattina kondï kettici*

He cut with knife.

If the noun belongs to human or animate class, the suffix *-ondi* has causal meaning in Kodagu For instance *avën nannondi o:dici* ' he studied because of me '. It is to be noted that Kothandaraman (1969:88) is separating the causative case from the instrumental case because the instrumental phrase can be nominalized as follows:

avën kettïnë katti

The knife with which he cut.

But the causal construction cannot be relativized. For instance **avën o:dïnë na:nï* is an unacceptable sentence. The syntactic difference in the above examples will be due to the co-occuring verb. That is why the differences within a case are called 'covert categories' by Fillmore (1967:3). So the causative can be grouped within the instrumental.

There is also an instance like *na:nï avëna kannodane kandë* ' I saw him with my eyes '. Here the instrumental suffix *ondï* cannot replace *-odane*. If we compare this sentence with the sentence *na:nï avëna kannondï notïnë* ' I looked at him with my eyes ' we do not find any difference in the surface level. But there is a difference, which is based on the finite verbs, i.e., *ka:n-* is a object oriented verb (some-

thing appears to the subject), and *no:ṭ-* is a subject oriented verb (in the sense the subject sees something). And also the verb *ka:ṇ-* tempts us that the verb itself gives the answer for the question how? (the answer is 'with eyes'). So *kaṇṇoḍane* gives only the emphatic meaning not the instrumental.

1.5.4. **Sociative**

The sociative case has only one suffix *-o:ḍe,* which occurs with all nouns.

egs.	*mu:ḍi-o:ḍe*	
	>mu:ḍiyo:ḍe	with girl (S.30)
	paṇa-t-o:ḍe	with money
	arïḷ-o:ḍe	with graceness

In the case of human nouns the sociative construction is also formed by adding the post-position *joteli* and *ku:ḍe* after the genitive inflected nouns. These are in free-variation with each other.

egs. *avën na:ḍa jotëlï ba.tï*

avën na:ḍa ku:ḍe ba:tï

He came with me.

And also to be noted that these two forms can occur freely without the noun as follows:

na:nï ku:ḍe po:ne

I went with (some one)

na:nï jotëlï iñjë

I was accompanying with (some one).

1.5.5. **Dative**

The suffix *-kï* indicates the dative case in Kodagu.

egs. *na:-kï* to me (Dat.)

mane-kï to the house (Dat.)

avaḷ-kï >avakï to her (Dat.) (S. 8)

indï-kï >inde:kï to this day (Dat) (S. 47)

Here the dative may be true as far as the surface feature is concerned. When we examine closely it would be seen that not all nouns with the above suffix are in the dative case relation with the verb The dative can be classified into dative proper, dative of direction and dative purpose (Kushalappa Gowda, 1972:351).

The dative proper has a non-location noun, an object and a transitive verb with reference to transferring something to some one.

For example:

a) *na:nï aveṅgï paṇa koḍïtë*

I gave him money

b) *ava na:kï pustaka koḍitetï*

She gave a book to me

The dative of direction has location verb and a motion verb with reference to the moment of something or someone in the direction of some place or location.

c) *na:nï aveṇḍa manekï po:ne*

I went to his house

So the dative proper and the dative of direction are in complementation.

The dative of purpose has the similar qualities which are shown in the case of dative proper.

For instance,

d) *na:nï avëngï paṇa eḍïtë*

I took money for him.

Though the sentence (d) appears almost similar to the sentence (a); (d) means 'I took money for the sake of him'. In this type of sentences, the noun with the dative suffix is not the receiver of the thing transferred (i e., *paṇa* 'money'). So this could be distinguished as the dative of purpose. But Shanmugam (1971·255) has considered that the contrast between the dative proper and the purposive found in certain sentences seems to be surface level phenomena since the suffixes of the dative proper and the dative of purpose are in complementation.

It is also to be noted that the dative marker *-kï* also occurs optionally with the place pronouns *alli* 'there' *illi* 'here' and *elli* 'where'.

egs.	*allikï ba:*	come ther
	alli ba:	come there

1.5.6 Ablative

The ablative suffix is *-iñji*, which occurs (1) always after the locative marker *-alli* when the nouns belong to human or animate class and (2) after the optional *-lï*, an allomorph of locative marker in inanimate nouns.

egs. *na:ḍalli-iñji*

>na:ḍalliñji from me (Abl.) (S. 31.)

	mane-iñji	
	>maneñji	from house (Abl.) (,,)
	maneli-iñji	
	>maneliñji	from house (Abl.) (S. 27)

It is also to be noted that the suffix- *iñji* is functioning as an adverb when it occurs after the verbal nouns, where the initial *-i-* is lost.

egs.	*bappė-iñji*	
	>bappėñji	at the time of coming (S.31)
	nippė-iñji	
	>nippėñji	at the time of standing (S.31)
	ma:ḍo-iñji	
	>ma:ḍoñji	at the time of doing (S.31)

1.5.7. **Locative**

-li and *-alli* are the locative suffixes that occur after inanimate and animate (including human and pronouns) respectively *-lï* occurs optionally after the link-morph *-t-*.

egs.	*mane-li*	in the house (Loc.)
	to·ṭa-t-li	in the garden (Loc.)
	to·ṭa-t >to:ṭatï	in the garden (Loc.) (S.28)
	na:-ḍ-alli	with me (Loc.)
	avën-ḍ-alli	
	>avëṇḍalli	with him (Loc) (S. 23)
	payyu-ḍ-alli	in the cow (Loc.)

It is also to be noted that sporadically the *-alli-* is in free variation with *-li*.

egs	*koḍagï-li* *koḍagïn-alli*	in Coorg (Loc.)

1.5.8. Purposive

The purposive case suffix *-a:ytï* occurs after all noun stems having *-k-* as the link-morph.

egs.	*na:-k-a:ytï*	for me (Purp.)
	mara-k-a:ytï	for trees (Purp.)

Agesthialigom (1967:4) has differentiated the purposive case from the dative because of having different suffiixes. Like that, Badaga, Telugu, Kolami etc., have separate marker for the purposive. It is worth mentioning that the dative of purpose and the purposive case are basically different, but Shanmugam (1971: 255) insisted that the dative phrase and the purposive are in complementation. Consider the following sentences:

a) *avën ni:ki paṇa koḍïtëtï*
He gave money to you

b) *avën ni:ka:ytï paṇa koḍïtëtï*
He gave money for you.

Here the verb is same in two sentences but the mean ing difference is only because of the case markers. In *ni:ki*, the dative proper and in *ni:ka:ytï*, the purposive mark er are the cause for the meaning difference.

1·5.9. Comparative

The comparative case marker is *-iñji* or *-iñja* which occurs after all noun stems having the link morph *-k-*.

egs.. *ni:k-iñji*, *ni:k-iñja* } than you (Comp.)

marak-iñji, *marak-iñja* } than the trees (Comp.)

1.5.10. Genitive

The suffixes *-ra* and *-ḍa* are affixed for the genitive construction in Kodagu, which occur after the inanimate nouns and animate nouns (including pronouns) respectively.

egs.	*marat-ra*	of trees (Gen.)
	mane-ra	of house (Gen.)
	payyu-ḍa	of the cow (Gen.)
	na:-ḍa	my
	appën-ḍa > *appëṇḍa*	father's (Gen.) (S. 23)

It is also to be noted that there are some exceptions as follows:

(1) The suffix *-ra* is in free variation with *-ḍa* when the animate nouns end in *-i*.

egs.	*mu:ḍi-ra* ∽ *mu:ḍi-ḍa*	girl's (Gen.)
	ajji-ra ∽ *ajji-ḍa*	grand-mother's (Gen.)

(2) The human nouns *a:ṇ(ï)* 'male' and *poṇ(ṇï)* 'female/wife' take only the suffix-*ra* and

(3) the borrowed noun *bukkï* 'book' takes *-ḍa* as the genitive marker.

All cases except the genitive have already been explained as casals showing the relation between noun and verb. But the genitive case is the one showing the relation between two nouns in the surface level.

In Kodagu, the nominals *na:ḍa mane* 'my house' and *ni:ḍa pustaka* 'your book' are derived from the sentences

a) *mane na:ḍadï* 'the house is mine' and b) *pustaka ni:ḍadï* 'the book is yours' respectively. By the same transformational rules which are applied for deriving nominals from the relative participle (i. e., *kïṇṇë ba:tï* 'the boy came' '→ *bande kïṇṇë* 'the boy who came') we can derive the nominals *naḍa mane* 'my house' and *ni:ḍa pustaka* 'your book' from the sentences (a) and (b) respectively. Functionally both the genitive and the relative participles seem to be related each other as both show the relation between the preceding and immediately following nouns (Kushalappa Gowda 1972 : 383).

1 6. PRONOUNS

There are three kinds of pronouns in Kodagu, viz, (1) personal pronouns, (2) reflexive pronouns and (3) demonsrative and interrogative pronouns. As the pronouns are not preceded by the genitive case phrase and adjectives like other nouns, they form a separate class in the nouns (Agesthialingom, 1967:23). For instance, *na:ḍa mane* 'my house'; *ni:ḍa mo·vën* 'your son' etc., but **ni:ḍa na:ni* 'your I' is an ungrammatical phrase.

1.6.1. PERSONAL PRONOUNS

The personal pronouns are *na:nï* 'I', *naṅga* 'we', *ni:nï* 'you (sg.)' and *niṅga.* 'you (pl)', which are distinguished only for number but not for gender and are inflected for case. The forms of the first person singular and the second person singular correspond exactly to those in modern Tamil and Kannada.

Ta. *na:n*	I	*ni:*	you (sg.)
Ka. *na:nu*	I	*ni:nu*	you (sg.)

Generally in Dravidian the oblique forms of the personal pronouns are formed by shortening the long vowel in the nominative. For example,

	Nominative		Oblique
Ta.	*na:m*	we	*nam-*
Te.	*e:nu*	I	*en-*
Pa.	*i:n*	you (sg.)	*in-*

But in Kodagu it is not do so. There are two types of oblique forms, one is formed by shortening the long vowel and the other is formed by the loss of the final *-n* in the nominative.

For example,

Nominative		Oblique
na:nï	I	*nan-, na:-*
ni:nï	you (sg.)	*nin-, ni:-*

The oblique forms *nan-* and *nin-* occurs only before the accusative and instrumental case markers; and *na:-* and *ni:-* occurs before the other case markers except the sociative *-o:ḍe*.

egs.	*nan-a* >*nanna*	my-Acc.	(S.21)
	nin-a >*ninna*	your-Acc.	(,,)
	nan-oṇḍi >*nannoṇḍï*	by me-Inst.	(,,)
	nin-oṇḍi >*ninnoṇḍï*	by you-Inst.	(,,)
	na:kï	to me-Dat.	
	ni:kï	to you-Dat.	
	na:ḍa	my -Gen.	

ni:ḍa	your -Gen.	etc.

In the case of plural forms *-kaḷ* is added to the oblique forms *nan-* of first person and *nin-* of second person.

egs.	*nan-kaḷ* >*naṅga*	we	(S.8,22 & 23.)
	nin-kaḷ >*niṅga*	you (pl.)	(S 8,22 & 23.)

Unlike other languages like Tamil, Malayalam etc. Kodagu has short vowel in all the plural forms of personal pronouns, but this shortening of the vowel must originally be the oblique bases which replaced the nominative form in all the plural forms (Shanmugam, 1971;182). This similar change is found in Tulu in the first person as well as in the second person plural. And also it is to be noted that the replacement of the nominative by the oblique is found in the reflexive plural. For example *taṅga* 'themselves'. This feature is also found in Toda of Nilgiri (Shanmugam, 1971:182).

There is no distinction between inclusive and exclusive plural but we find that there are two forms viz, *naṅga* and *eṅga* for the first person plural in Kodagu. Of these forms, *eṅga* can be derived from the oblique base *en-*, which is equivalent to *nan-* As already noted the oblique forms *nan-* and *na:-* for the first person singular nominative form *na:nï* 'I' 'the forms *en-* and *e·-* can be taken as oblique forms in the following examples.

egs.	*en·a* >*enna*	I -Acc.	(S.21)
	en–oṇḍï >*ennoṇḍï*	by me -Inst.	(„)
	e:-ki	to me -Dat.	
	e:-ḍa	my -Gen.	

These forms could be the oblique forms of the nominative *e:nï* 'I' but unfortunately the nominal *e:nï* is not in Kodagu. And also to be noted that these forms *eṅga,*, *en-* and *e:-* are mostly found in the folk-songs and in the speech of educated Kodavas; but these are being gradually disappeared by the other forms *naṅga*, *nan-* and *na:-*.

1.6.2. REFLEXIVE PRONOUNS

The forms *ta:nï* 'self' (i. e. himself, herself, itself etc.) and *taṅga* 'selves' are used to denote singular as well as plural reflexive pronouns in Kodagu language. These pronouns always refer to the subject of the verb, but there is only one exception when the plural form *taṅga* is used in addressing a single individual very courteously to express even greater respect than *niṅga* in Kodagu like Tamil, Malayalam etc. And also these forms are inflected in the same way which is found in the personal pronouns.

	Nominative	Oblique
Sg.	*ta nï*	*tan-, ta:-*
Pl.	*taṅga*	*taṅga*
egs.	*ta:nï*	self-Nom.
	tan-a > tanna	-Acc. (S.21)
	tan-oṇḍï > tannoṇḍï	-Inst. (")
	ta:-kï	-Dat.
	ta:-ḍa	-Gen.
	taṅgaḷ > taṅga	selves- Nom. (S 8)
	taṅgaḷ -a	-Acc.
	tangaḷ -oṇḍï	-Inst.

taṅgal -kï		
> *taṅgakï*	–Dat.	(S.8)
taṅgaḷ-ḍa		
> *taṅgaḍa*	-Gen.	(S.8)

1.6.3. DEMONSTRATIVE AND INTERROGATIVE PRONOUNS

The demonstrative and interrogative pronouns are a sub-class of nouns derived from demonstrative and interrogative roots by the addition of gender number suffixes

egs.	*avën*	he – that
	avaḷ > *ava*	she – that (S. 8)
	ayeṅgaḷ > *ayṅga* / *avu*	they (he/she) (S8.& 41)
	adï	it – that
	ivën	he – this
	ivaḷ > *iva*	she – this (S. 8)
	iyeṅgaḷ > *iyṅga* / *ivu*	they – this (he / she) (S. 8 & 41)
	idï	it - this
	e:vën	who (Masc.)
	e:vaḷ > *e:va*	who (Fem.) (S. 8)
	e.yeṅgaḷ > *e:yṅga* / *e.vu*	who (people) (S. 8 and 41)
	e:dï	which

According to the above mentioned pronouns, the gender-number distinction is found as four-fold in Kodagu; they are masculine singular, feminine singular, epicene plural and neuter. The same kind of distinction is also found in Kota (Shanmugam, 1971:3).

The demonstrative pronouns have been further classified into two viz., remote demonstrative and proximate demonstrative on the basis of their bases, which are *a-* 'that' and *i-* 'this' corresponding to what is found elsewhere in Dravidian. In attributive use these bases are usually lengthened to *a:-* and *i:-* as in the following examples,

a: pustaka	that book
i: mane	this house

Only the uninflected forms are used attributively in this way; then these are meant as adjectives. And also in the inflected forms we find the lengthening of these two. For instance,

a:-na	that -Acc.
a:-n-ḍa >*a:ṇḍa*	that -Gen. (S. 23)
a:-lï	in that -Loc.
a:-noṇḍï	by that -Inst.
a.-n-kï >*a:ṅgï*	to that -Dat. (S.22 & 23)
a:-ndalli >*a:ṇḍalli*	in that -Loc. (S.23)

Here the lengthened form is meant for neuter gender. On the other hand the interrogative pronoun has only one variant as shown above, i. e., with the lengthened base *e:-*. For the inflected forms, *e:-* replaces *e:dï* only in the case of the locative marker *-li*. For example,

e:-li	in which -Loc.

In addition to this interrogative pronoun, *da:rï* 'who' and *a:rï* 'who' occur freely for human noun.

1.7. NUMERALS

Numeral is treated here as a sub-class of nouns,

since they carry gender-number category and are inflected' for case. The basic numeral morphemes in Kodagu are only sixteen in number. They are:

ka:lï	a quarter
are	half
ondï	one
daṇḍï	two
mu:ndï	three
na:lï	four
añji	five
a:rï	six
ë·ḷï	seven
ëṭṭï	eight
oym-(badï)	nine
pattï	ten
nu:rï	hundred
a:yra	thousand
lakṣa	lakh
ko:ḍi	crore

All the other numeral expressions are formed by multiplication and summation, which have been treated in detail under constituent structure (see the rules 8.1.24 to 8.1.34). All these simple numerals belong to the inanimate nouns. Except the fraction the remaining are used as both nominals and attributes to a following noun head. As in other Dravidian languages, Kodagu is also having the cardinal and ordinal distinction. The suffix *-ane* is affixed for ordinal number.

egs. Cardinal | Ordinal

ondi	one	*ondane*	first
daṇḍi	two	*daṇḍane*	second
mu:ndi	three	*mu:ndane*	third
na:li	four	*na:lane*	fourth
etc.			

It is to be noted that Kannada and Tulu are also having the same ordinal marker, which seems to be related to *-a:m* of Tamil and Malayalam because the non-past tense base of this verb is *a:g-* in Kodagu and Kannada. And also in Kodagu, the ordinals take the link-morph *-a:n-* when they are inflected for accusative, dative and genitive cases.

For example,

ondi-a:n-a > *onda:na*	one (Acc.) (S. 27)
daṇḍi-a:n-ki > *daṇḍa:ŋgi*	two (Dat.) (S. 22,23 & 27)
mu:ndi-a:n-ḍu > *mu:nda:nḍa*	three (Gen.) (S. 23 & 27)

In the case of gender-number, the masculine singular *-vën*, feminine singular marker *-vaḷ* and the epicene plural marker *-var* occur only with the adjectival base of the numeral one to seven.

egs.	*or-vën* > *obbe*	one man (S. 15,16,21 & 31)
	or-vaḷ > *obba*	one woman (S. 8,15,16 & 21)
	ir-var > *ibba*	two persons (S. 15,16 & 21)
	mu:-var > *mu:va*	three persons (S. 16)

na:l-var > na:va	four persons	(S. 5 & 16)
aj-var > ajva	five persons	(S. 16)
aru-var > aruva	six persons	(S. 16)
ë:l-var > e:va	seven persons	(S. 8 & 16)

By the comparative reconstruction only eleven numeral morphemes viz, one to ten and hundred can be set up for proto-Dravidian (Panikkar, 1964). In addition to these cardinal numbers they have bound adjectival variants which occur before certain bound stems, classifiers or certain other derivative suffixes.

It is worth mentioning that the cardinal form is found to be used as adjective in Kodagu. This feature is not only found in Kodagu but also in Tamil from 13th century (Shanmugam, 1961.145), in Malayalam from 10th century (Sekhar, 1653:101) and even in Kannada from the early period (Gai, 1946:73). And also the language Kurumba, Irula, Kasaba, Tulu and Badaga employ always cardinal number as adjectives, but in Kodagu also the numeral adjectives in some phrases can be replaced by the cardinal number.

Cardinal	Cardinal used as adjective	
ondï	*ond-*	one
daṇḍi	*daṇḍ-*	two
mu:ndï	*mu:nd-*	three
na:lï	*na:l-*	four
añji	*añji*	five
a:rï	*a:r-*	six
ë:lï	*ë:l-*	seven

ēṭṭi	*ēṭṭ-*	eight
oymbadi	*oymbad-/oymbay-*	nine
patti	*patt-*	ten
nu:ri	*nu:r-*	hundred

The above mentioned forms and other adjectival variants are described in detail in the following sections.

1.7.1: ONE:- The cardinal form is *ondi* 'one'. It has four adjectival variants, viz., *or-*, *o:r-*, *ori-* and *ond-*. The forms *or-* and *o:r-* are in complementary distribution since they are conditioned by the following forms, beginning with consonants and forms, beginning with vowels respectively. It is also to be noted that *or-* occurs mostly with bound forms except *co:ḍi* 'pair' and *o:r-* occurs with free forms.

egs.	*or-vēn >obbē*	one man (S 15,16,21 & 38)
	or-vaḷ >obba	one woman (S. 8,15,16 & 21)
	or-te >otte	single (S. 16 & 21)
	or-ma >omma	once (,,)
	or-co.ḍi >occo:ḍi	one pair (S 52 & 56)
	o:r-akētti	one pair of bullocks
	o:r-a·yra	one thousand
	o:r-aḍi	one time in meals

The form *ori-* occurs before neuter nouns beginning with consonants and human nouns.

egs	*ori-samaya*	perhaps
	ori-mara	one tree
	ori-a:ḷi	one servant
	ori-muḍi	one girl

In the case of nouns, denoting object, *ond-* is used as adjective.

egs.	*ond-a·ḷï*	one servant
	ond-mara	
	>ondïmara	one tree (S. 71)
	ond-mu:ḍi	
	>ondï mu:di	one girl („)

1.7.2. TWO:- *daṇḍi* is cardinal form for the numeral two. This is also connected with another - form *eraṇḍï* in Kodagu The form *eraṇḍï* occurs only after the adjectival bases of the numerals one to seven and ten.

egs.	*o:r-eraṇḍï*	
	>o:raṇḍï	one by two (S. 68)
	i:r-eraṇḍi	
	>i:raṇḍï	two by two (S. 68)
	mu:-eraṇḍi	
	>mu:veraṇḍï	three by three (S. 69)
	na:l-eraṇḍï	four by four
	ay-eraṇḍï	
	>ayyeraṇḍï	five by five (S. 56)
	a:r-eraṇḍï	
	>a:raṇḍï	six by six (S. 68)
	ë:ḷ-eraṇḍï	seven by seven
	pann-eraṇḍï	ten by ten

And also to be noted that *eraṇḍï* is found for cardinal in some flok-songs of Kodagu instead of *daṇḍi*, but it could be disappeared later.

The adjectival variants are *ir*, *i:r-*, *iru-* and *daṇḍ-*, of which *ir-* and *i:r-* occur before consonants and before vowels respectively.

egs.	*ir-nu:ri* >*innu:ri*	two hundred (S. 52 & 56)
	ir-ma >*imma*	twice (S. 16 & 21)
	ir-var >*ibba*	two persons (S. 15,16 & 21)
	i:r-a:yra	two thousand
	i:r-a:ṇḍi	two years.
	i:ṟ-a:ce	two days
	i:r-aḍi	two times in a meals

The adjectival base *iru-* occurs only before *padi*, the allomorph of *patti* 'ten' and *daṇḍ-* occurs invariably before all nouns.

egs.	*iru-padï* >*iruvadï*	twenty (S 49)
	daṇḍ-a:yra	two thousand
	daṇḍ-a:ḷï	two servants
	daṇḍ-mara >*daṇḍï mara*	two trees (S. 71)

1.7.3. THREE:- The cardinal form for three is *mu:ndï* in Kodagu. The adjectival variants viz, *nu-*, *mu-* *mu:-*, *mu:r* and *mu:nd-* are used in this language. *nu-* occurs only before *padi* / *patt-* 'ten'; *mu-* occurs before the nouns beginning with consonants *mu:-* occurs before the nouns beginning with vowels and certain derivative suffixes like *-ma*, the frequentative clitic and *-var*, the epicene plural marker and *mu:r-* occurs only in the case of *ettï* 'bullocks' as found in *mu:r-akëttï* 'three pairs of bullocks'. This *mu:r-* may be due to the influence of Kannada because *mu:ru* is used as cardinal number for three in Kannada.

egs.	*nu-padi* >*nuppadi*	thirty (S. 56)

nu-patt-ondi	
>nuppattondi	thirty one (S. 56)
mu-nu:ri	
>munnu:ri	three hundred (S 56)
mu-mu:ndi	
>mummu ndi	three by three (S 56)
mu:-a:ndi	
>mu:va:ndi	three years (S. 69)
mu:-a:yra	
>mu: va·yra	three thousand (S. 69)
mu:var >mu:va	three persons (S. 16)
mu:-ma	three times

Emeneau (1967b.140) suggested that the initial *n-* in *nu-* may be due to the influence of the next numeral which has *n-* in the initial position. This feature is also found in Kurux (*nubb* 'three') and in some Tamil dialects spoken in Thiruchirapalli, Tanjavur and Kanyakumari districts.

As already noted that the cardinal form, used as adjective can replace the other numeral adjectives, but in Kodagu the cardinal adjective *mu:nd-* replaces only *mu:-* not the other numeral adjectives

egs.	*mu:nd-a:yra*	three thousand
	mund-a·ndi	three years

And the form *mu:nd-* occurs before all nouns except in the place of the occurrence of the numeral adjectives *nu-*, *mu-* and *mu:r-*.

egs.	*mu:nd-a:ḷi*	three servants
	mu:nd-to:ṭa	
	>mu:ndito:ṭa	three gardens (S. 71)
	mu:nd-mu:ḍi	
	>mu:ndi mu:ḍi	three girls (").

1.7.4. FOUR.– In Kodagu the cardinal form for four is *na:li*. The proto-Dravidian form is **na:l ku*, with the formative **-ku*, but some languages like Modern Tamil, Malayalam, Kodagu, Tulu and Naiki (Ch) have only *na·l-* 'four' without the formative suffix **-ku*.

na:l- and *nan-* are found to be used as adjective in Kodagu. *na:l-* is reconstructed for proto-Dravidian and it undergoes certain morphophonemic changes. *nan-* is found in one place only as *nan-na:lï* 'four times four', which seems to be equivalent to Tamil *nan-na·nku* but in the case of *na:na:ng* 'four times four' as found in Kota it can be considered that the *nan-* in Kodagu and Tamil, can be developed from *na:l*.

egs.	*na:l-padi* >*na:padi*	forty	(S. 51)
	na l-nu:ri >*na.n:uri*	four hundred	(,,)
	na.l-var >*na va*	four persons	(S. 5 & 16)

1.7.5. FIVE.– The cardinal for five is *añji* in Kodagu. This can be derived from *ayndi* since *y+nd* is changed as *-ñj-* and *i* (<*u*) is changed as *i* due to the precedence of the palatal consonants.

The forms *aim-*, *ay* and *añji* are found to be used as adjectives in Kodagu. As far as these forms are concerned, *aym-* before *padï/patt-* 'ten', *ay-* before other numerals, the epicene plural *-var* and in the case of *ëttï* 'bullock'. and *añji* before all nouns, are found as adjectives.

egs.	*aym -padi* > *aymbadï*	fifty	(S. 53)
	aym-patt-ondi >*aymbattondï*	fifty one	(,,)

ay -añ ji >ayyañji	five times five (S. 56)
ay-nu:ri >aññuri	five hundred (S. 48 & 49)
ay-var >ayva	five persons (S. 16)
ay-akëtti >ayyaketti	five pairs of bullocks (S.56)
añ ji-a:ṇḍï >añja:ṇḍi	five years (S. 60)
añ ji-mara	five trees

In the case of *aññu:ri* 'five hundred' *n* is changed into *ñ* when it is preceded by palatal consonant *y*-. This may be found from the earliest period because other literary languages like Tamil and Malayalam have *aynu:ru* and *aññu:ru* for five hundred.

1.7.6. SIX:- *a:ri* is the cardinal form and *a:r*- and *aru* are the adjectival forms. *aru* occurs only before *padi/patt*- 'ten' and the epicene plural marker *-var* and *a:r*- occurs elsewhere. The adjective *aru*- is also recorded in Tamil, Malayalam, Kota, Toda and Kannada.

egs.	*aru-padi >aruvadï*	sixty (S.50)
	aru-patt-ondi	
	>aruvattondï	sixty one (S. 50)
	aru-var >aruva	six persons (S. 16)
	a:r-a:rï	six times six
	a:r-a:yira	six thousand
	a:r-a:ḷï	six servants
	a:r-mane	
	>a:rmane	six houses (S. 71)
	a:r-mu:ḍi	
	>a:rmu:ḍi	six girls („)

1.7.7. SEVEN:- The form *ë:ḷï* is found to be used as cardinal with the adjectival variants *e:ḷ*- and *ëḷu*. The form

ẹ̄ḷu occurs only before *padï/patt-* 'ten' and *ẹ̄:ḷ-* occurs elsewhere.

egs.	*ẹ̄ḷu-padï* > *ẹ̄ḷuvadi*	seventy (S. 50)
	ẹ̄ḷu-patt-ondï > *ẹ̄ḷuvattondï*	seventy one (S. 50)
	ẹ̄:ḷ-vaṇ > *ẹ̄ va*	seven persons (S. 8 & 16)
	ẹ̄ ḷ-nu:ri	seven hundred
	ẹ̄:ḷ-a:yra	seven thousand
	ẹ̄:ḷ-makka > *ẹ̄:ḷïmakka*	seven children (S. 71)
	ẹ̄:ḷ-to:ṭa > *ẹ̄:ḷi to:ṭa*	seven gardens („)

1.7.8. EIGHT:- *eṭṭi* is the cardinal form for eight and the reflexes of the adjectival forms, viz., *ẹn-* before *padi/patt-* 'ten' and *ẹṭṭ-* elsewhere are found in Kodagu.

egs	*ẹm-padi* > *ẹmbadï*	eight (S 53)
	ẹm-patt ondi > *embattondi*	eighty one (S. 53)
	ẹṭṭ-a:yra	eight thousand
	ẹṭṭ-nu:ri > *ẹ̈ṭnu ri*	eight hundred (S. 64)
	ẹṭṭ-mane > *eṭṭïmane*	eight houses (S. 71)

According to Kumaraswami Raja (1969:22) *eṭṭi* in Kodagu is derived from *eṇ-tt* > *eṇ-ṭṭ* because **eṇ-* is the reconstructed stem of Proto-Dravidian. Here the *-ṭṭ-*(<*tt*) is considered as a formative suffix and it is a common innovation in Pre-Tamil, Malayalam, Kota, Toda, Kodagu and Kannada. Instead of the base *eṇ-* in the case of *eṇṇu:ru* 'eight hundred' Kodagu shows the cardinal as in *eṭ-nu:ri* 'eight hundred'. This proves that the use of cardi-

nal form is found to be used as adjective. In the case of eight hundred, this feature is found in all languages except Tamil and Malayalam.

1.7.9. NINE:- The cardinal form of nine is *oymbadï*, which can be reconstructed from *onpadu* (DED 862). The adjective forms viz., *tom-*, *oymbay-* and *oymbad-* are found in Kodagu, of which *tom-* occurs only before *padi*/*patt-* 'ten'; *oymbay-* occurs only before *nu.rï* 'hundred' and *oymbad-* occurs elsewhere.

egs.	*tom-padï*	
	>*tombadi*	ninety (S: 53)
	tom-patt-ondi	
	>*tombattondi*	ninety one (S-53)
	oymbay-nu:ri	nine hundred
	oymbad-a:yra	nine thousand
	oymbad-a:ḷï	nine servants

As far as the nine is concerned *oymbad-* is replaced by *oymbay* because it is already noted that the cardinal form of the numeral has replaced the adjective or base form of it even in nine hundred as found in six hundred, seven hundred, eight hundred etc.

oymbadi, instead of *tom-* (> **toṇ-*) is a common innovation in South Dravidian languages, because the reflexes of *ombadï* (> *onpatu*) 'nine' are found recorded from the earliest record of the literary languages like Tamil, Malayalam and Kannada.

1.7.10 TEN:- As in many other Dravidian languages Kodagu is also having *patti* as cardinal form for ten. This form has four allomorphs viz., *patt-*, *padïn-* *pann-* and *padi*

The reflexes of *patt-* occur in nineteen, which is common in all the South Dravidian languages except Tulu. And also it occurs in between the adjectives of the numerals two to nine and the cardinals one to nine.

egs.	*patt-oymbadi*	nineteen
	iru-patt-ondi	
	>iruvattondi	twenty one (S. 50)
	aym-patt-eṭṭi	
	>aymbatteṭṭi	fifty eight (S. 53)

padïn- occurs in thirteen to eighteen.

egs.	*padin-mu:ndi*	
	>padïmu:ndi	thirt en (S. 65)
	padïn-na:li	
	>padina:li	fourteen (S. 66)
	padïn-aññi	fifteen
	padin-a:ri	sixteen
	padïn-e:ḷi	seventeen
	padïn-eṭṭi	eighteen

By using a sandhi rule, in the case of thirteen and fourteen *padin-* is taken here as a reflex in Kodagu, which is different from other Dravidian languages. In thirteen, the reflexes of *padin* (<**patin*) is recorded in Old Tamil only.

The reflexes of *pann-* is found only in eleven and twelve.

egs.	*pann-ondï*	eleven
	pann-eraṇḍi	twelve

Kota, Toda and Kannada also have the reflexes of *pann-* in eleven whereas *patin* in Tamil, Malayalam and Telugu. The

change of *patin-* into *pann-* can be easily explained as it is due to the following numeral, because twelve has got the allomorph *pann-* in all the South Dravidian languages (Shanmugam, 1971:171).

padi- occurs only after the adjectival bases of numerals two to nine when it is followed by pause, i.e., for the numerals 20 30, 40, etc.

egs.	*iru-padi* >*iruvadï*	twenty	(S 50)
	nu-padï >*nuppadï*	thirty	(S.56)
	aym-padï >*aymbadï*	fifty	(S 53)
	ėm-padi >*embadï*	eighty	(„)
	tom-padi >*tombadi*	ninety	(„)

In addition to these forms *payt-* and *pav-* are also found to be used as adjectives in Kodagu. *payt-* occurs only before the noun *a:ṇḍï* 'year' and in the case of *ėttï* 'bullock' and *pav-* occurs before the cardinal *pattï* 'ten'.

egs.	*payt-a:ṇḍï*	ten years
	payt-akėttï	ten pairs of bullocks
	pav-pattï	ten times ten

1.7.11. HUNDRED:- The cardinal form for hundred is *nu:rï*, which can also occur as adjective before all nouns except numerals; but the oblique form *nu:yṭa-* occurs as adjetive before the numerals.

egs.	*nu:yṭa-ondï* >*nu:yṭondï*	hundred and one (S. 61)
	nu:yṭa-daṇḍï	hundred and two

nu:r-mara	
>nu:rimara	hundred trees (S· 71)
nu·r-a:ḷi	hundred servants

1.7.12. The cardinals for thousand, lakh and crore are *a:yra*, *lakṣa* and *ko:ṭi* respectively in Kodagu language, The ref-lexes of *a:yra* and *lakṣa* are borrowings from Sanskrit.

In addition to these cardinals of thousand and lakh, *a:yrat-* and *lakṣhat-* are used respectively as oblique bases when the other numerals follow.

egs.	*a:yrat-ondï*	thousand and one
	lakṣhat-mu:ndï	lakh and three

1,7.13. As far as cardinals are concerned they denote gender distinction since they are capable of taking masculine, feminine and epicene plural markers, which seem to be found in demonstrative pronoun.

For example,

Masculine	*avën obbë(n)*	He is one man
Feminine	*ava(ḷ) obba(ḷ)*	She is one lady
Epicene plural	*ayṅga(ḷ) ibba(r)*	they are two persons
Neuter	*adı ondï*	That is one thing

In the case of epicene plural the appellative form of numeral is found only in the numeral two to seven as, *ıbba(r)* 'two persons', *mu:va(r)* 'three persons' etc. From eight onwards *a·ḷi* 'man/servant' is added with the nume-rals as *ëṭṭ-a:ḷı* 'eight persons', *oymbad-a:ḷi* 'nine persons, etc. Later the form *a:ḷi* replaces the epicene plural marker *-var* as *daṇḍ-a:ḷi* 'two persons'; *mu:nd-a:ḷı* 'three persons' etc., instead of *ibba(r)*, *mu.va(r)* etc.

1.8. COMPOUND NOUNS

1.8.0. Those nouns which have two or more roots or stems combined to act as a single morphological nucleus replaceable by a single noun stem are treated as compound nouns in Kodagu. Most of the compounds are endocentric compouds in which the first member is a noun or an adjective which acts as an attribute to the following noun head. And it is not possible to expand a compound by inserting another stem or word between its constituents.

Though the compounds are the result of one lexical unit selecting certain others only for cooccurrence, the choice of cooccurrence is grammatical rather than lexical in a phrase. Therefore there is a higher degree of predictability and productivity in phrase structure. For instance if we consider the compounds as mere morphological structure as Noun+Noun units, there is a possibility to have a compound of the type *poṭṭi+go:ḍe* 'box wall', which does not convey anything but the combination *go:ḍe poṭṭi* 'wall box' is meaningful and grammatical. This reveals the fact that mere juxtaposition of nouns could not become compounds and the combination should convey grammatical meaning. Those compounds are then to be said as well-formed compounds.

1.8.1. There are many sub-classes of endocentric compounds.

1.8.1.1. In one class of endocentric compounds there are a common set found in Kodagu, which shows a specific + generic relationship. The second member denotes a species in that showing a generality whereas the first member refers

to a particular variety. Both forms of the compound could be traced to nominals. In general the compounds consist of names of plants, work, play, confectionary, speech, disease, shed, etc.

1.8.1.1.1. *kaḷañji* root

akki kaḷañji	a kind of root
ti:nĩ kaḷañji	—id—
na:re kaḷañji	—id—
pandi kaḷañji	—id—
puttari kaḷañji	—id—
bellatı kaḷañji	—id—

1.8.1.1.1. *baḷḷi* creeping plant

aṅgare baḷḷi	a kind of plant
a:nemoṭṭi baḷḷi	—id—
kole baḷḷi	—id—
pokkı baḷḷi	—id—

1.8.1.1.3. *mara* tree

acci mara	a kind of tree
aṭike mara	-id-
ambaṭs mara	-id-
a:tĩ mara	-id-
kay mara	-id-
poṭṭi mara	-id-

1.8.1.1.4. *ka:yi* fruit (vegetable)

a:li ka:yi	hailstone
paḍala ka:yi	snake gourd
paraṅgi ka:yi	pumpkin

1.8.1.1.5. *kumĩ* fungus

a:ḷi kumĩ	a kind of fungus
ka:ṭo:ḷa kumĩ	-id-
kummaṭe kumĩ	-id-
na:ykoḍe kumĩ	-id-
nucci kumĩ	-id-
pandi kumĩ	-id-

1.8.1.1.6. *ba:ḷe* plantain

erci ba:ḷe	a kind of plantain
ĩ:ḷemba:ḷe	-id-
kuri ba:ḷe	-id-
kemba:ḷe	-id-
ciṅgamba:ḷe	-id-
nayndra ba:ḷe	-id-
pacce ba:ḷe	-id-
bu:di ba:ḷe	-id-
mara ba:ḷe	-id-

1.8.1.1.7. *giḍa* plant

e:la giḍa	cardamom plant
ka:ci giḍa	a kind of plant (used for fence).

1.8.1.1.8. *koḍi* rope or creeping plant

ciṭṭi koḍi	a kind of creeping plant
to:re koḍi	-id-
ni:la koḍi	a kind of rope
ne:ṅgi koḍi	-id-

1.8.1.1.9. *mi:ni* fish, star.

ë:ṭe mi:nï	a kind of fish
ceype mi:nï	-id-
ta:ḷi mi:ni	-id-
pa:mbi mi:nï	-id-
bare mi:ni	-id-
ba:natï mi:nï	star
ba:ḷe mi:nï	a kind of fish
matti mi:nï	-id-
boḷḷi mi:ni	-id-
sigïḍi mi·nï	-id-

1.8.1.1.10. *pa:mbï* - snake

oḷḷè pa:mbï	cobra	
ka·na pa:mbï	a kind of snake	
ke:re pa:mbi	-id-	
nu· pa:mbï	-id-	(S. 51)
pacce pa·mbï	-id-	
pa:ruvë pa:mbï	-id-	
perïm ba:mbi	-id-	(S. 53)
male pa:mbï	-id-	

1.8.1.1.11. *pakki* bird

uṣṭra pakki	ostrich bird	
kembakki	common kite	(S. 53)
ko:mbakki	a kind of bird	(„)
ki:ḷuvë pakki	-id-	
gi:je pakki	weaver - a bird	

ciṭṭe pakki	a kind of bird
pa: pakki	bat (S. 51)
ba:mbakki	bat (S. 53)
mane pakki	house-lark

1.8.1.1.12. *puḷu* warm

ajji puḷu	catter pillar
umbuḷu	jungle leech
ere puḷu	earth warm
kambḷi puḷu	catter pillar
minnambuḷu	fire-fly

1.8.1.1.13. *pillï* grass

emme pillï	a kind of grass
oṇe pillï	dried grass
ney pïlli	a kind of grass

1.8.1.1.14. *aḍake* areca-nut

kaḷiyaḍake	green areca-nut
go:ṭaḍake	full-grown areca-nut
cikkaḍake	grown areca-nut

1.8.1.1.15. *mane* house

aḍige mane	kitchen
aynï mane	central house of a family
umbaḷa mane	dining hall
te:ke mane	mourning house
tï:ke mane	polluted house
na:lkëṭṭï mane	four winged house

ba:ke mane	husband's house
macci mane	thatched house
mundï mane	house having front yard

1.8.1.1.16. *puṭṭï* confectionary, prepared by boiling the rice flour.

aḍike puṭṭi	a kind of confectionary	
o:ḍï putti	rice cake	
kaḍïm buṭṭi	small ball of rice cake	(S.33)
kuḷïrï puṭṭï	a kind of putting	
caṭṭi puṭṭi	-id-	
ciṭṭaṇi puṭṭï	-id-	
tambuṭṭi	-id-	(S.58)
taḷiya puṭṭi	a -id-	
do:se puṭṭï	-id-	
nu:puṭṭï	-id-	(S. 51)
paṇi puṭṭï	-id-	
pa:puṭṭï	-id-	(„)

1.8.1.1.17. *ro:ga* disease

aṇḍu ro:ga	infection
a:neka: ro:ga	elephantiasis
kusṭa ro·ga	leprosy
guhya ro:ga	veneral disease
bayro:ga	roaring disease

1.8.1 1.18. *ṭakkï* language, word, speech.

aḍḍa ṭakkï	intervention
alāṭï ṭakkï	useless talk

o:le takkï	leaf-language
gaṇḍï takkï	sweet words
callï takkï	slow talk
tale takkï	first word
noṇe takkï	sweet talk
puccï takkï	murmuring
poleji takkï	slang words
po:li takkï	untruth words
bambï takkï	idle talk
buddi takkï	advice
mula:ji takkï	talk about consideration

1.8.1.1.19. *paṇi* work

aḍige paṇi	cooking
a:ka paṇi	cultivation
okkï paṇi	heaping the bundle of corn
o:ṇi paṇi	work in the lane
te:ka paṇi	the work of plastering
nari paṇi	hard work
pora paṇi	exterior work
bakka paṇi	nearest work
boḷe paṇi	harvesting
mane paṇi	house-hold work
muṭṭaḷe paṇi	rat's work

1.8.1.1.20. *kallï* stone

addï kallï	boundary stone
ammi kallï	grinding stone (for chilly)

irïmbaṭe kallï	rough surfaced stone
uppï kallï	a piece of salt
kaggallï	black stone
kaḍaci kallï	mortar and pestle
kaḍeca kallï	grinding stone
kaḍavë kallï	-id-.
karïṅgallï	black stone
ju:ju kallï	a big round stone
poḍi kallï	gravel
bi:juvë kallï	grinding stone
boṅge kallï	white stone
beli kallï	a flat stone

1.8.1.1.21. *kaḷi* play

aṅgé kaḷi	mourning dance (by Harijans)
cokkï kaḷi	unwanted activities
ta:rï kaḷi	a kind of play with sticks
tëḷḷï kaḷï	a kind of play
paḍe kaḷi	a dance
pariya kaḷi	-id-
puñje kaḷi	silly actions
ma:ri kaḷi	mischievous act

1.8.1.1.22. *pare* drum

a:ṭï pare	dancing drum
ca:vi pare	death music

1.8.1.1.23. *koṭṭi* shed

aṭṭa koṭṭï	cattle shed

kaḍëci koṭṭï	calf shed
puḷḷi koṭṭi	fire-wood shed
meypë koṭṭï	shed - used for pounding grains

1.8.1.1.24. *keṭṭï* bind, building.

are keṭṭï	waist band
ole këṭṭï	platform for oven
kakkeṭṭı	compound wall (S.52 & 56)
cappara këṭṭï	a portion in a house
jana këṭṭï	crowd of the people
toḍa këṭṭï	a place for binding the plough and yoke
na:l këṭṭï	four-winged (house)
poṭṭi këṭṭï	room for grains
me:këṭṭi	decoration of cloth in the pendhal

1.8.1.1 25. *poṭṭi* box.

a:lï poṭṭi	a kind of box
ku·ṭï poṭṭi	–id–
go:ḍe poṭṭi	wall box
tapa·lï poṭṭi	post–box
mu:le poṭṭi	box - which is in the corner

1.8.1.1.26. *bedï* sun-light

uṭṭi bedï	high-noon
cuḷḷë bedï	hot-sun
nari bedï	light-sun

1.8.1.1.27. *maṇḍe* - head

uṭṭi maṇḍe	crown of the head
ca:ṇe maṇḍe	bald head
paḍa maṇḍe	back of the neck or head
baṇṇe maṇḍe	bald or empty head

1.8 1.1.28. *to.ṭa* garden

iñji to:ṭa	ginger plantation
ka:pi to:ṭa	coffee plantation
teṅgï to:ṭa	coconut farm
pañje to:ṭa	vegetable garden
puḷi to:ṭa	orange plantation
ba:ḷe to:ṭa	plantain farm
mañje to:ṭa	turmeric plantation

1.8.1.1.29. *kuṇḍi* pit

uppï kuṇḍi	a place (connection with salt pit)
ca·ṇa kuṇḍi	dung-pit
gobbare kuṇḍi	manure-pit

1.8.1.1 30. *takkë* head-man

u:rtakkë	village head-man
de:va takkë	temple protector
de:śa takkë	country head-man
si:me takkë	head-man of the other country

1.8.1.1.31. *pore* hut

a:le pore	out-house

otte pore	single hut
pippore	hut-thatched by grass

1.8.1.1.32. *pa:ṭï* song

a:nanda pa:ṭï	the song of joy
oyya pa:ṭï	foreward song
na:ṭi paṭi	song (while transplanting)
paḷamba:ṭï	old song (S.53)
baṭṭe pa:ṭi	road-song
mane pa:ṭï	house-song

1.8.1.1.33. *a:ṭa/a:ṭi* dance, action

ayla:ṭa	a kind of dance
ucca:ṭa	the action of urinating
ummata:ṭa	a kind of dance
ko:la:ṭa	-id-
puliya:ṭa	-id-
boḷaka:ṭï	-di-

1.8.1.1.34. *poḷdï* time

okka poḷdï	dedicaction to the new crop
kaylpoḷdï	a festival of arms
de:va poḷdï	dedication of the new crop to God
puttari poḷdï	harvest festival

1.8.1.1.35 *katti* knife

oḍi katti	a kind of knife
kaḷe katti	weeder

cāvra katti	razer
caḷa katti	sword
cu:riyë katti	a kind of knife
pallï katti	reaper
pi:ce katti	small knife
ba:ḷï katti	sword

1.8.1.1.36. *pole* pollution

kuriḍï pole	blind pollution
ca:vï pole	death pollution
tiṅga pole	monthly pollution
tï:ṇḍï pole	untouchable pollution
purïḍï pole.	birth pollution
pette pole	-id-
makka pole	pollution due to death

1.8.1.1.37. *tere* wave, screen.

ka:roṇë tere	ancestor propitiation
ka:ḷe tere	strong waves
kuññi tere	small wave
kuṇḍi tere	manure pit
kombëndere	strong waves (S. 53)
cu:ḷe tere	rolling wave

1.8.1.1.38. *te:nï* honey.

kolli te:nï	honey taken from small stream
ko:te:nï	honey from trees (S.51)
perïnde:nï	honey of big bee (S .53 & 54)

ponde:ṅi	honey of big bee (S. 53)
mu:li te:ṅi	honey of small bee

1.8.1.1.39. *kari* sauce

erci kari	mutton sauce
ku:ṭi kari	vegetable sauce
pandi kari	sauce made from pork
mi:ṅgari	sauce of fish (S 53 & 54)

1.8.1.1.40. *kuññi* child, small one of birds or trees

a:ṅuññi	male child (S. 53, 54 & 57)
poṅguññi	female child (S. 53 & 54)
kaḷi kuññi	affectionate child
ko:ḷi kuññi	chicken
mara kuññi	sapling

1.8.1.1.41. *ko:la* festivity

a:ṅgo:la	festivity of a man (S. 53 & 54)
poṅgo:la	festivity of a woman (S. 53&54)
ka:roṇë ko:la	propitiation of ancestor

1.8.1.1.42. *ëṇṇe* oil

a:ṇakëṇṇe	castor oil
ëḷḷëṇṇe	gingily oil

1.8.1.1.43. *ka:ḍï* forest

kare ka:ḍï	nearest forest
ba:ṅga:ḍï	dangerous forest (S. 53 & 54)

1.8.1.1.44. *a:ṇi* nail

eliya:ṇi	nail in the central beam of roof (S. 59)
ėlita:ṇi	stylus (S.60)

1.8.1.1.45. *gu:ḍï* nest

elıbı gu:ḍi	skeleton
ko:ḷi gu:ḍi	chicken house

1.8.1.1.46. *o:ḍï* tile

oṭṭi o:ḍï	griddle of *oṭṭi*
mu:le o:ḍï	corner tile

1.8.1.1.47. *male* mountain

e:la male,	cardamon mountain
iggita male	a mountain
co:mė male	-id-
tumbe male	-id-

1.8 1.1.48. *makka* children

ėṇe makka	twins
kay makka	small children
ka:makka	-id- (S. 51)
kïṇṇė makka	boys (S. 52 & 56)
pommakka	girls (S. 54)
pole makka	untouchable people
mari makka	grand children

1.8.1.1.49. *ka.ḷï* leg

kaṅga:ḷï	glowing leg (S.53 & 54)

ca:ṭe ka:lï	short stepped legs
maṛa ka:lï	wooden leg
muṅga:li	fore-leg (S. 53 & 54)
muṭṭï ka:lï	knee of the leg
muḷe ka:lï	knee
me:ṅga:lï	foot (S. 53 & 54)
moḷa ka:lï	knee

1.8.1.1.50. *boḷica* light

kacci boḷica	small lamp
kuttïmboḷica	bell-metal lamp
tu:kı boḷica	hanging lamp

1.8.1.1.51. *go:li* ball

kaṇṇï go:li	pupil of eye
ciṭṭi go:li	nut of *ciṭṭi* plant

1.8.1.1.52. *puḷi* orange or sour fruit

kay puḷi	tamarind
ta:ḷi puḷi	a kind of plant having sour fruit
toleya:rï puḷi	-id-
paṇa puḷi	-id-
baḍavë puḷi	-id-
moyra puḷi	-id-

1.8.1.1.53. *a:le* shed or verandah

kaṇḍiya:le	narrow passage in front of a house (S. 59)
kayya:le	verandah (S. 56)

1.8.1.1.54. *sara* chain

kaysara	bracelet
ka:sara	anklet (S. 51)

1.8.1.1.55. *ko:li* stick

kavko:li	side beam in the roof
kaḷi ko:li	a kind of rod
ta:ko:li	–id– (S. 51)

1.8.1.1.56. *ma:le* garland

ka:ju ma:le	a kind of ornament
pu:ma:le	garland made of flower
pomma:le	garland made of gold (S. 54)
minni ma:le	a kind of ornament

1.8.1.1.57. *ni:ri* water

kuḍi ni:ri	saliva
tëḷi ni:ri	cleaned water
pacce ni:ri	cold water
tale ni:ri	cold
tuppi ni:ri	saliva
panni:ri	perfumed water
bisi ni:ri	hot water

1.8.1.1.58. *mari* young one of animals (horse, pig etc)

kudire mari	colt
pandi mari	pig-let

1.8.1.1.59. *kaḍëci* young one of cow (cattle)

atta kaḍëci	calf of cattle
maṇḍe kaḍëci	male calf of cow

1.8.1.1.60. *baḷe* bangles

kaṭṭi baḷe	thick bracelet
kuppi baḷe	grass bangles

1.8.1.1.61. *muṇḍï* dothi

kuññi muṇḍï	small dothi
ko·ḍi muṇḍï	new dothi

1.8.1.1.62. *koḍe* umbrellah

korambe koḍe	umbrellah made of palm leaves
ko:ri koḍe	-id-

1.8.1.1.63. *pallï* teeth

aṇe palli	grinders (teeth)
ko:re pallï	long curved teeth
caṅgi pallï	a kind of teeth
mumballï	front teeth (S. 53 & 54)

1.8.1.1.64. *na:yi* dog

kaḍi na:yi	snapish dog
gëṇḍï na:yi	male dog
tale na:yi	big dog
po:li na:yi	cur
bo:ṭe na:yi	hound

1.8.1.1 65. *ka:ḷe* bull

kuññi ka:ḷe	bull-calf
ko:re ka:ḷe	tusk of animal
caṅgī ka:ḷe	mature conch
nandlyë ka:ḷe	name of bull

1.8.1.1.66. *kaṭṭi* cot

ku:ṭi kaṭṭi	a type of cot
cappara kaṭṭï	-id-

1.8.1.1.67 *pa:rï* beam or reaper or blank

uyya pa:rï	beam of plough
kaypa:rï	elbow
cavṭï pa:rï	blank for steps
boḷica pa:rï	a small blank used to keep lamp
macci pa:rï	roof-beam

1 8.1.1.68 *bera* finger

ko:ve bera	ring finger
ciṇṇi beṛa	small finger
muṭṭï bera	thumb

1.8.1.1.69. *maḷe* rain

ciṇikī maḷe	fine rain drop
ciliṅgi maḷe	drizzling
panni maḷe	-id-

1.8.1.1.70. *kala* pot

ceñci kala	big copper pot

co:re kala	blood vessel

1.8.1.1.71. *kajja:ya* a kind of big vessel

taṭṭi kajja:ya	flat vessel
poṅgajja:ya	golden vessel (S. 53 & 54)
bu·kï kajja:ya	a kind of vessel

1.8.1.1.72. *mette* cushion

ka:mette	pillow (for leg) (S. 51)
talmette	–id– (S. 72)

1.8.1.1.73. *paṇa* coin

ce:ḷe paṇa	money given in marriage
pombaṇa	gold coin (S. 53 & 54)
palaya paṇa	money-getting in marriage

1.8.1.1.74. *boḷakï* lamp

tu:kï bolakï	hanging lamp
nellakki boḷakï	a kind of lamp
pomboḷakï	golden lamp (S. 53 & 54)

1.8.1.1.75. *kaḷa* platform

ka:roṇe kaḷa	platform in the ancestor shrine
tu:ṭëṅgaḷa	a place for cremation
pa:ṭï kaḷa	well-cleaned place

1.8.1.1.76. *cu:rï* pieces

kuppi cu:rï	pieces of bottle
teṅge cu:rï	pieces of coconut

1.8.1.1.77. *avare* beans

ko:ḷiyávare	sword beans (S. 59)
toppavare	a kind of beans

1.8.1.1.78. *mandï* villlage green

u·rṃandï	village green
de:va mandï	place for village festivals
pu:mandï	beautiful village green

1.8.1.1.79. *maḷu* chilly

naḷḷë maḷu	pepper
paraṅgi maḷu	a kind of chilly
boṭṭe maḷu	-id-

1.8.1.1·80. *kaḍandi* wasp

umí kaḍandi	red wasp
nari kaḍandi	big wasp

1.8.1.1.81. *kuṟu* seed

cakke kuru	nut of jack fruit
nellï kuru	paddy seeds

1.8.1.1.82. *ko:ḷi* fowl

u:ṛ ko:ḷi	village fowls
pu:vë ko:ḷi	cock
mallëṅgo:ḷi	-id- (S. 53 & 54)
ka:plï ko:ḷi	sitting hen
ka:ḍiko:ḷi	wild fowl

1.8.1.1.83. *cakke* jack fruit

a:ṭi cakke	a kind of jack fruit
pi:ce cakke	-id-
barke cakke	-id-

1.8.1.1.84. *po:kï* way of going

baṭṭe po:kï	way of the path
bay po:kï	back way

1.8.1.1.85. *tale* head

baṭṭe tale	starting point of the path
bay tale	back side of the head

1.8.1.1.86. *cukki* star

buvvë cukki	falling star
mi:ñcukki	star (S.54)

1.8.1.1.87. *kumbaḷa* gourd

bu:di kumbaḷa	ash coloured pumpkin
bellatï kumbaḷa	sweet pumpkin
sakkare kumbaḷa	-id-

1.8.1.1.88. *guṇa* character

kayguṇa	qualities of hand
managuṇa	good mind
va:yuguḍa	wind

1.8.1.1.89. *paṇṇï* fruit

ma:mbaṇṇï	mango furit (S.53)

mulli panni	a kind of fruit

1.8.1.1.90. *kay* hand

me:ngay	back of the hand (S.53 & 54)
mola kay	elbow

1.8.1.1.91. *tudi* tip

ba:na tudi	tip of the arrow
mole tudi	nipple

1.8.1.1.92. *bu:mi* land or earth

añña:na bu:mi	land of ignorance
kībbu:mi	lower land (S. 52 & 56)
ma·ni bu:mi	dry land
sva·le bu:mi	wet land

1.8.1.1.93. *lo:ka* world

brahma lo:ka	world of Brahma
śiva lo:ka	world of Siva
sura lo:ka	celestial's world

1.8.1.1.94. *kuli* bathing

ponguli	sacred bath (S. 53 & 54)
pole kuli	the time of menstruation

1.8.1.1.95. *ba:yi* mouth

agni ba:yi	God of fire
pole ba:yi	polluted mouth

1.8.1.1.96. *akki* rice

poriyakki	fried rice (S. 59)
mañjalakki	turmeric
e:lakki	cardamon (S. 60)

1.8.1.1.97. *beli* propitiation

kare beli	propitiation in land
ni:rbeli	propitiation in water

1.8.1.1.98. *ka:la* age, time.

kali ka:la	the years of Kaliyuga
paruva ka:la	proper season
pittiyë ka:la	next year
bahu ka:la	many years
be:ni ka:la	summer season
muḍiṅga:la	the time of destruction (S. 53 & 54)

1.8.1.2. In another class of endocentric compounds both of the constituents are attested and occur free elsewhere in the language. The first member is generally a noun in an attributive position or a descriptive adjective, which is very similar to that it is found in the above class

egs.	*aṅgare kajji*	measles
	anna da:na	giving away food for charity
	are caṅṅo:le	an ornament for waist
	i:tï karci	birth expenditure
	ugra tapa	deep meditation
	uḷḷï ge:na	thought, idea

erco:ṭi	a tree (S.60)
elïmbo:ṭi	-id-
elï katri	trap for rat
ele taṭṭe	salver of a large size
ele bo:ga	chewing of betel leaves
oḍaluri	burning sensation in stomach
kaṭṭaḷe paḍi	door
kaṭṭimo:rï	curds
kaṛi maṇi	bracelet
ku:paḍï	coupon (S. 51)
keñjiri	red squirrel (S.54)
kenda:vare	red lotus
kombëñjavra	horn-shave (S.53 & 54)
ca:ki mo:va	adopted daughter
jallï ba:yën	jesting-talk man
ña:ṇa kë:ḍï	shame
nari ti:ni	too much food
pa:mañji	green scum on water (S. 51)
pimmuṇḍe	heap of paddy hay (S. 52 & 54)
pondaṭṭë	goldsmith (S. 53 & 54)
pombaḍi	golden door (,,)
etc.	

1.8.1.3. In the following compounds the first member is a bound as well as free adjective with restricted distribution, while the other is relatively free.

egs. *apa ki:rti* disrespute

aynï kaḷḷë	real thief
aynï mane	central house of a family
ayla:ṭa	mimicry
arme saṅgaṭa	difficult position
a:di ka:roṇë	first ancestor
a:di guru	first preceptor
a:di mu:la	first cause
e:ka ka:la	same time
otte poyti	single combat
otte pore	one winged house
oḷḷë pa:mbï	snake cobra
o:re kaṇṇï	squint eye
kaḷa kupya	blouse
kaḷi kuññi	affectionate child
kaḷi noga	yoke
kïrï na:vï	uvula
kïrkë nari	panther
porï naḍe	slow walking
porï tëḷi	gentle smile
porï poḍi	a confectionary
poṛï kemmalï	small coughing
boṅge pa:re	white rock
boppo:ḷe	crane
bovpiḷḷï	dry grass
marï ku:ṭï	echo
marï doni	-id-
marï dale	affend betweed village
marï va:kï	counter-course

etc.

1.8.1.4. In another class of compound nouns the first member is relatively free whereas the second constituent is unique one.

egs.	*ammi kuṭṭi*	roller stone
	a:yuta pa:ṇi	man with weapon
	kaḍiva:ṇa	bridle of horse
	karï kare	kindness
	kïppuṇi	lower bunds in a field (S. 52 & 56)
	jalanidi	sea
	daṇḍï da:ḷı	weapons etc.
	paḍe po:ši	uselessness
	porambaḍï	excommunicated man
	ba:ḷe birdï	honour of the plantain stump
	mogava:ḍa	mask
	etc.	

1.8.2. There are another kind of compound nouns found in Kodagu, named as intensive compounds (Krishnamurti, 1967:241) because in most cases there is atleast one free constituent followed by a unique form for intensifying the meaning of the other constituent.

egs.	*atti patti*	rows
	andi mondi	sun-set
	a·sti pa:sti	property and so on-
	e:tïkï pu:tïkï	confusion
	kèḷakï boḷakï	dawn
	takkï ba:kï	talking
	taṭṭï muṭṭï	deficiency

daḍḍï buḍḍï	noise of heavy fall
paṇṇï pala	fruits etc.
poṭṭï poḷi	unruth
muykï muy	tit for tat
sama taṭṭï	flat
samsa:ra saṃe:ta	living with whole family
suttu muttu	all round
etc.	

1.8.3. Without overt connective denoting 'and', there are some compound nouns found in Kodagu. These compounds can be called as coordinate compounds.

egs.	*aḍi piḍi*	broil
	o:le a:ḷi	messenger
	ku:ṭï kari	vegetable sauce
	va:ndï be:di	cholera
	etc.	

1.8.4. There are some compounds grouped under fused compounds (Krishnamurti, 1969:243), since one of the constituents in each compound exhibit unique morphophonemic alternants.

egs.	*ka:ra: kaṇṇi*	a kind of curry
	tapo:śakti	power of meditation
	bu:sañca:ra	wandering on earth
	ma:dore	great king
	mu:de:vi	extravagant woman
	mo:ba:yi	mouth of a gun
	etc.	

1.8.5. Multinominal Compounds

Multinominal compounds involve more than two constituents of which the first two become one unit and then they form into one unit with the remaining constituent. This type of compounds are very limited in Kodagu.

egs.	*a:neka: ro:ga*	elephantiasis
	a:nemoṭṭi baḷḷi	a kind of plant
	kaykaṇe tuṇi	begrimed cloth
	kaykaṇe ba:ḷë	a kind of bird
	kallımara kaype	giving up stone and tree while divorcing
	kemikuṭṭi maṅgala	ear-boring festival
	koḍiyele taṭṭe	plate used for betal leaf
	titti kaṇḍa pakṣi	a bird
	de:śakëṭṭi pa:ṭi	a song
	na:ykoḍe kumi	a kind of fungus
	na:lkëṭṭi manè	four winged house
	pa:nı maṇḍe tuṇi	turban
	etc.	

2. VERBS

2.0. Verbs are a class of words inflected for the categories of tense and mood. The verb form from which all the categories of Kodagu verb are formed is called root, which can also be used as singular imperative in Kodagu. The root might be called the stem, since it means the radical form of a word without the affixes, but most of the verb roots are used as noun in Kodagu, (§ 2.9 2.1) egs. *aḍi* 'blow', *aḍi-c-* 'beat'; *kaḍi* 'biting', *kaḍi-c-* 'bite' etc.

In Kodagu the main classification of the verb stem is done on the basis of the past tense markers they take.

Since there are three past tense markers all the stems are classified into three classes. In each class, the stems are again divided into two viz., transitives and intransitives due to the capablity of taking direct object and not taking direct object respectively at the syntactic level. The transitive verbs with no overt transitive markers are called *inherent transitives* and others *inherent intransitives*.

The inherent intransitives are again divided into two sub-classes, viz.,

(1) INTRANSITIVE-1 (Intr.-1), which cannot be made transitives by the addition of transitive markers and

(2) INTRANSITIVE-2 (Intr.-2), which can be made transitives by the addition of transitive markers - named as derived transitives. Those stems with transitive markers can also be called as complex stems (Krishnamurti, 1969: 274).

There are some verbs in Kodagu which can be used both as intransitive and transitive. In this kind of verb the contrast between intransitive and transitive is shown only by the tense markers. Here to negate the contrast between the tense markers a morphophonemic *-x-*, suggested by Lisker (1956.111-114) in Tamil is introduced as a transitive marker as well as a part of the stem.

egs.	Intransitives		Transitives
	aḍe-v-a	stop (hole or gap)	*aḍe-x-p-a*
	oḍe-v-a	break (pot)	*oḍe-x-p-a*
	taṇi-ñj-ëtï	cool down	*taṇi-x-c-ëtï*
	muḍi-ñj-ëtï	exhaust, end	*muḍi-x-c-ëtï*

The morphophonemic *-x-* is also useful in the case of the so-called strong verbs in order to account for the occurrence of *-k-* before many suffixes beginning with *a-*, *a:-* or *u-* as found in,

nilx-a >nikka	will not stand
naḍax-a:ṭa	
>naḍaka:ṭa	oct of walking
ṭëḷix-u >ṭëḷiku	may laugh (he/she).

As already pointed out all the verbal stems in Kodagu are classified into three on the basis of past tense markers *-i-*, *-t-* and *-nd-*. All the simple and compound stems have been listed here.

S.1. -*i*- CLASS

All those stems which take *-i-* as the pasttense marker belong to this class

S.1.1. INHERENT TRANSITIVE

aṭṭ- chase

aṇṭ- stick

aṇḍ- fasten to

ayla:ṭ- panter

argi:s- make to live with co-operation

alamb- wash (hands)

alamb- put water into mouth and gargle

avama:ḍ change the order

aviṅg- break into pieces

aḷak- uproot (like weeds)

aḷak- dig up

a:k- make to stay in a place

a:ñj- choose

a:ṭ- drive away, propel

a:ḷ- rule

utt- untie (knot)
udd- rub
uddama:d- dilute
und- pushout, thrust forward
urip- blow by mouth, flute
uḷip- twist moustache
uḷḷ- thing deeply
u:k- comb
u:t suck
u:d- blow with mouth or wind instrument
u:r- thrust end with stick while walking
ett- arrive, reach
e:j- scold
okk thresh sheaves of corn by treading with cattle
ogg- make friendship, agree
ott- press, squeeze
olap- wash (plates, pots)
olamp- gargle and spit out
o:ṅg- raise hands
o:d- read
ï:p- drag
ëṇṇ- say, tell
ëḷïd- write
ë:d- write
kakk- vomit
kaṅgo·t- make hole
katt- wash (plates, legs hands etc.)
kabb- seize with wide mouth
kammima:ḍ- reduce
kayku:ṭ- take over
kaymalaṅg- bow with hands jointly
kaymuṭṭ- shake hand
korak- dissolve
karat- oppose, encounder
ka:k- call, invite
ka:d- oppose
ka:pa:ḍ- protect
ka:r- vomit
ka:lima:ḍ- vocate
kiññ- tear into stripes
kinn- tear into stripes
kugg- make short
kuṭṭ- pound
kutt- dash against
kutt- gore, thrust with fist
kett- cut, gore
kocc- brag
koṭṭ- beat (drum)

koṇḍa:ḍ- praise
kott- peck, pick up with single motion
koḷïk- link
kòḷït- fasten (rope on horn, loop on soulder)
ko:t- fill by scooping
këṭṭ- build, tie
kṣamis- pardon
gi:r- cut deep
guṇïs- calculate
gudd- pound with fist
cadar- disperse, spread
call- speak slowly
cavṭ- step on
ca:k- rear (child, young animal)
ca:ṭ- step on
ca:ḍ- hesitate, hate
ca:pama:ḍ- print
ca:yku:ṭ- clean
cilïk- castrate
ci:p- suck
ci:r- grumble answer back
cu:ḍ- stick flower in hair
cell- emulate
cell- scatter (grains), throw away water
ceḷḷ- follow
japis- pray
jall- tease
ja:ṭ- jump, leap
jo:t- spin
ñavṇḍ- squeeze
ñuṇḍ-/nuṇḍ- pickup with two fingers
taṭṭ- strike off, affect (curse)
tabb- embrace
tall- beat (drum)
tavut- chase
tavḍ- search for in dark
tikk- erase
tidd- twist and clean, clear (drain)
ti:t- feed by hand
tuṇḍ- break (rope, thread etc.)
tupp- spit
tuḷiku:ṭ- drip
tu:r- defecate
toḍït- aim (arrow)
to:ḍ- dig (well, tank etc.)
tïrïm- twist moustache
tëḷḷ- push
të:ḍ- search for

danat- extinguish

dovt/dovt- chase

da:t- cross

dikk- swallow

du:d- push away

du:r- give information laid against a person

dolamb- gargle, wash (throat)

do:t- drive away cattle

nakk- lick

namb- believe

nerimb- possess (devil)

ne:r- appropriate as an offering to God

no:t- look

në:d- earn

padad- praise, celebrate

panang- be at variance

patt- climb, ascend

pabb- spread (the news)

parand- scratch (the coconut

pareda:d- search

pa:d- sing

pund- squeeze (anything with liquid in it)

pu:j- do acts as worship

pott- cover completely

podd- possess (evil influence)

poyt- blow

porik- pickup (small objects)

po:t- rear

po:r- transport (by back animals)

pi:d- annoy

balas- practice

ba:k- pour water (from cooked rice)

ba:g- divide, share

ba:t- take up in a hand-ful, make food into round marsal

bitt- scatter, sow

bi.j- grind with grinding stone

budit- draw picture

bu:k- pour water

bu:d- be in faith with God,. worship

bendat- drive the bullocks with stick

belak- object, brohibit

be:ng- cut (plantain trunks in wedding)

be:ng- consume, eat

bolamb- serve, (food)

bo:ḍ- worship, beg

malaṅg- worship with hands

ma:ḍ- do

ma·nd- scratch

ma:r- sell

mi:r- disregard

mugg- swallow

mucc- close (pot, window etc.)

muṭṭ- pump against

mutt- kiss

mund- over take

mu:ñj- suck (penis)

mu:r- disregard

mu:s- smell

mecc- please

va:dama:ḍ- dispute

says- endure

sall sprinkle like water

sahis- endure

sa:r- give

sutt- go around

se:d- drink a deep draught

hogaḷ- praise

ho:l- resemble

S 1.2. INHERENT INTRANSITIVE

As already noted these stems are again classified into two viz, intransitive-1 and intransitive-2.

S.1 2.1. INTRANSITIVE-1. Those stems which are not capable of taking transitive markers belong to this group.

agg- become bed of coals (fire)

aḍag- settle into a tree (birds)

abbarīḍ- call for protection

aḷak- possess (God)

aḷas- become spoiled

a:g- (*a:-*, *a:x-*) become

a:ṅgijo:ṅg- become tired

iṅg- dry up (breast)

ukk- over flow in boiling

ucca:ṭ- urinate

uḷīk- sprain

eñj- remain, be left behind

elaṅg- gleam

e:ṅg- long for, lengthen note (in singing)

okk- be carried away by stream, overflow

or- fall asleep

oraḍ- answer.

oll- be able, agree

ëḍama:ḍ- play together

ëḍame:ṅg- mingle, be mixed up

ëṇaṅg- assent, agree

ë:r- be extra, be more than enough

kaḍe këḍ- have monetary transaction

katt- burn with blaze

kayku:ḍ- get success

kalamb- make quarrel

kuṇṭ- limp

kumm- churm

kend- being accepted (medicine)

kemm- cough

kokk- bend (stick, iron rod etc.)

kocc- brag

kodal- stammer

kïṭṭ- be got

cikk- entangle

cikk- become poper

cigïr- be established

ciṇïk- drizzle

cilïṅg- drizzle

cutt- wander about

cokk- be fat, cause intoxication

coṭṭ- limp

co:r- leak (water)

jagg- be lowered

ja:r- slip

jo:ṅg- become tired

ḍoṅk- be bent

tagg- be reduced/lowered

taṭṭ- touch (in mind)

tapp- escape

taḷuv- become boil

tirïg- go about wandering

tuṇḍ- limp

tumb- become full (tank etc.)

tumm- sneeze

tuḷḷ- make small jumps

tekk- give respect

te:ṅg- become noisy (door, window etc.)

te:ṅg- become end

tolag/tolaṅg- leave or loss

to:nd- appear

to:r- leak (water from roof or pot)

ṭimm- sneeze

dumb- become full

naḍanama:ḍ- dance

nerak- groam

nerave:r- accomplish

ne:r- become full

neṭṭ- sigh

neṭṭ- give sharp shake

nërak- murmer (diseased person)

pacc- speak slowly

pann- drizzle

pabb- twin (plant)

pa:r- fly

pucc- talk madly

puṭṭ- born

pe:ca:ḍ- do hard work

poṅṅ- swell (as grains or stomach)

poṭṭ- burst with noice

pott- fight

podïr- become grown (like grains)

pond- bounce, be raised

pond- be suitable

porïnd- be suitable

polaṅg- bounce (fish)

po:- (*po:g-*, *po:x-*) go

bagg- stoop

batt- go dry (tank/well)

badïk- live

badd- come into existence

baraj- feel for (something)

ba:ṅg- become bend, slope

bi:j- blow (wind, wave or flag)

busïku:ṭ- hiss

bevr- sweat

be:ṅg- be continued

be:r- be brought into mind

be.v- be warmed, cooked

bogaḷ- bark as a dog

bogg- become frighten

bott- fear

makk- became faint

maṅg- become dim

mariḷ- be wilder

ma:j- become soiled

ma:r- be happy

ma:rïku:ḍ- (fire) covers fully on the dead body

miñj- be left over, remain

minn-	be lighten	*salah-*	wait
mi:nd-	swim	*sall-*	be available
mokk-	smear	*soyatapp-*	faint
he:s-	become dirty	*hond-*	be suitable (Kannada)

S.1.2.2. INTRANSITIVE - 2. Those stems which are capable of taking transitive markers belong to this group. This is again classified into two on the basis of the capablity of taking transitive markers *-k-* and *-t-*.

S.1·2·2.1. Stems which take the transitive marker *-k-*

aḍaṅg-	(*aḍak-*)	subjucate
aḍïṅg-	(*aḍïk-*)	file in orderly fashion
amïṅg-	(*amïk-*)	press
iriṅg-	(*irïk-*)	tight
urï-	(*urïk-*)	melt
oṇaṅg-	(*oṇak-*)	dry
oḷaṅg-	(*oḷak-*)	dry, lean, weak
ëraṅg-	(*ërak-*)	slip down throat slowly
ëḷag-	(*ëḷak-*)	uproot
karï-	(*karïk-*)	digest
kalaṅg-	(*kalak-*)	stir up
kuliṅg-	(*kulïk-*)	shake
ju ṅg-	(*ju:k-*)	sway
ta:ṅg-	(*ta:k-*)	lean
tu:ṅg-	(*tu:k-*)	hang
teraṅg-	(*terak-*)	shift in one seat
tïrï-	(*tïrïk-*)	turn around
ni:ṅg-	(*ni:k-*)	go aside

nugg-	(*nu:k-*)	enter
puṅṅ-	(*pu:k-*)	slightly decompose
beraṅg-	(*berak-*)	mix up
maḍaṅg-	(*maḍak*)	fold
mayaṅg-	(*mayak-*)	bewilder
minïg-/minïṅg-	(*minïk-*)	glitter
muṅṅ-	(*mukk-*)	dive under water
murï-	(*murïk-*)	tighten
muḷi-	(*muḷik-*)	dip in
me:ṅg-	(*me:k-*)	mix thoroughly
molïṅg-	(*molïk-*)	press

S.1.2.2 2 Stems which take the transitive marker *-t-*

a:ḍ-	(*a:ṭ-*)	dance
a r-	(*a:t-*)	dry up, cool down (as coffee)
urïṇḍ-	(*urïṭ-*)	roll up
o:ḍ-	(*o:ṭ-*)	run
ku:ḍ-	(*ku:ṭ-*)	join together
ke:r-	(*ke:t-*)	go up to house
koḷï-	(*koḷït-*)	fasten
kï:r-	(*kï:t-*)	tear
tirïṇḍ-	(*tirïṭ-*)	roll up
turïṇḍ-	(*turïṭ-*)	roll up
te:r-	(*te:t-*)	grow up
tï:ṇḍ-	(*tï:ṭ-*)	touch
na:r-	(*na:t-*)	smell
nï:ṇḍ-	(*nï:ṭ-*)	stretch out

pa:r-	(*pa:t-*)	shake
bavṇḍ-	(*bavṭ-*	bend
ba:ḍ-	(*ba:ṭ-*)	fade
boraṇḍ-	(*boraṭ*)	throw into confusion by fear
ma:r-	(*ma:t-*)	change
saraku.ḍ-	(*saraku:ṭ-*)	become one side

S.2. -t- CLASS

All those stems which take the past tense marker *-t* belong to this class.

S.2.1. INHERENT TRANSITIVE

In order to negate the non-past morphemes *-p-* and *-(u)v-* the verbal stems are again sub-divided into two viz., *x* ending stems and non-*x* ending stems.

S.2.1.1. *-x* ending stems

accaḍix- print

aḍix- beat

aḍïx- approach

anubavix- experience good or evil

anuma:nix- determine by influence

abima:nix- esteem

ayx- send

arpix- offer

iḍax- shut (door or window)

ux-(u:-) plough

uḍïx- put on

uṇx-(u:ṇ-) eat

uyix- take (paddy etc.)

e:yx- join (things)

oyx- exhaust

orex- suck

oḷix- keep out of sight

o:x-(o:ḷ-) coapulate

ïḷïx- drag

ï:x- (ï:-) drag

ëḍïx- raise, take

ẹḍitikoḍix- buy and give
kaḍi- bite
kaṇḍipuḍix- find out
kattarix- cut with scissors
kanix- throw
kayx- remove, undo
kalpix- establish
kaḷx- rob
kaḷax- dig
ka:x- protect
kuḍix- drink
kurix- engage, draw
kerex- shave
kerïx- prevent, hinder
koḍïx- give (to third person)
kodax- ruin, destroy
kodix- desire
korix- bite (snake)
kë:ṭaḷax- finish (the vow)
kė:ḷx- ask, borrow
krayakeḍix- buy
cadix betray
caynx- chew
cavënx- chew
ca:karix- protect
cuynx- bite (fly ants)
cerïx- stop, close
japix- pray
tayax- level the field (with plough beam)
taḷix- sprinkle
tinx- (ti:n-) eat
tudix- praise
teḷax- make to sit
toḍax- clear
tovx- worship, salute
datteḍix- adopt (child)
nenax- think
ne:mix- appoint
paḍix- learn
parix- pluck
paḷix- slander
paḷex- speak ill off
puḍix- seize, hold
pu:rx-/pu:ḷx- bury
porïx- carry
aḍix- beat
balix- drag
ba:gix- divide
bïgix- tighten
beyx- keep, place
munduvarix- continue
mo:hix- woo
viṅgaḍix- divide

vivarix- describe
vro:dix- defy
samba:dix- earn
sammadix- approve
sa.dix- accomplish

S.2.1.2. Non-x ending stems

aḍ- cook
uy- discharge (arrow)
ïḍ- put down
kaybuḍ- omit, leave
ka:ḷïḍ- punish
kuṇḍïkïḍ- bury in a dig
kumbïḍ- bow (head) with shyness
key- do
koyy- pluck
guriyïḍ- aim at
gelḻ-(ged-) win
cuḍ-(cu:ḍ-) burn
teṛ- pay (penalty)
toḍ- touch
dageyïḍ- cheat
naḍ-(na:ṭ-) plant
neyy-(ne y-) braid, spin
per- bear child
poyy- beat (drum)
bayy- abuse
buḍ- drive, avoid
raṅgïḍ- dye
raṭṭïḍ- make book bind

S.2.2. INHERENT INTRANSITIVE

S.2.2.1. INTRANSITIVE-1

S.2.2.1.1. -x ending stems

aḍix- strike (lightning)
aḍix- blow (wind)
aḷax- sit
a:vaḷix- yarn
udix- rise (sun)
erix- burn (mouth)
kayx- be bitter
kayax- bear fruit
karax- become black
karïx- become black
kaḷix- play
ka:tëḍïx- take rest

*kuḍï*x- shake (earth)
*kuḷï*x-feel cold feeling
*kekkari*x- cackle
*kela*x- bellow as buffalow
*kodi*x- boil with bubling noise
*kopḷi*x- jump as frog
*koya*x- bear fruit (as plantain)
*kore*x- bark (as dog)
*kola*x̄ shoot against (plant)
*koḷu*x- decay (things)
*giḷï*x- shiver (earth)
*co l*x/*so:l*x- be defeated
*taḍi*x- become bulky
*tari*x- become bitter
*tuyn*x- hiss (snake), snort (bull)
*eri*x- totter about
*tora*x- wind round and round
*toḷi*x- laugh
*tëḷi*x- laugh
*noṇe*x- feel with the tip of the tongue
*paḍapaḍa*x- flutter quickly to and fro
*paḍaraḍï*x- migrate
*padi*x-/*pay*x- (belly) hungers
*paraṇḍaḷa*x- take oath, give order
*pali*x- happen, take effect
*puḍi*x- conceive, bear (fruits)
*puḍï*x- (leg) swells
*puli*x- become sour
*perï*x- increase
*po*x-(*po:r*-) fight
*poḍa*x- move quickly
*poy*x- utter false hood
*poli*x- bark repeatedly
*bala*x- blur (eyes)
*ba:ypaḍi*x- hawl out
*be:di*x- be differed
*boḷï*x- become white
*maṇa*x- give smell
*madi*x- be lustful of the female
*marapuḍi*x- become numb
*mu:*x- grown up
*movï*x- become sweet
*moḷa*x- sprout (plants)
*suda:ri*x- gain strength

S.2.1.2. Non-x ending stems

abipra:yapaḍ– think over it
a:śebuḍ– despair
iṣṭapaḍ– desire
ca:– die
tuḍi– be in mental agitation, be eager
nali– play
pa:ḍïpaḍ– work hard
poraḍ– start
pratipaḍ– challenge
bali– become mum
baḷibuḍ– breath
moraḍ– weep

S.2.2.2 INTRANSITIVE-2

S.2.2.2.1. Stems which take the transitive marker *–ït–*

asu:yepaḍ–	*(asu:yepaḍït–)*	envy
anandapaḍ–	*(a:nandapaḍït–)*	amuse
ulla:sapaḍ–	*(ulla:sapaḍït–)*	merry
oḷepaḍ–	*(oḷepaḍït–)*	include
kaṣṭapaḍ–	*(kaṣṭapaḍït–)*	suffer
këḍ–(kë:ḍ–)	*(këḍït–)*	spoil
paḍ–	*(paḍït–)*	suffer/experience
saripaḍ–	*(saripaḍït–)*	correct
sugapaḍ–	*(sugapaḍït–)*	cure
stirapaḍ–	*(stirapaḍït–)*	become permanent

S.2.2.2.2 Stems which take the transitive marker *–ṭ–*

ka:x–	*(ka:t–)*	wait
kaṇ–(ka:ṇx–)	*(ka:ṭ–)*	see (show)

S.2.2.2.3. Stems which take the transitive marker *–k–*

modïx–	*(modïk–)*	become sweet

S.2.2.2.4. Stems which take the transitive marker *-p-*

kalix-	(*kalip-*)	increase (as cattle, rat etc.)
kuḷix-	(*kuḷip-*)	bathe
ox-	(*opp-*)	agree

S 3. *-nd-* CLASS

All those stems, which take the past tense marker *-nd-* belong to this class.

S.3.1. INHERENT TRANSITIVE

S.3.1.1. -x ending stems

alax- crave

aḷax- measure

erax- beg

kaıax- milk

kalax- knead

tax- (*ta:-, tar-*) give

torax- open (door, window etc.)

poḷax- open (mouth)

marax- forget

S.3.1.2. Non -x ending stems

aṇi- wear, enjoy

ari- find out

a:y- choose

a·rakey- utter words for blessing

u:y- spit (as betel)

oli- wash (clothes)

kaḍe- grind with mortar and pestle

kaḷe- loss

koḍa- pull with hook

koṇḍibar- (*koṇḍiba:-*) bring

kol- kill

koḷ- take (one self)

ko:ndaḷ- bring

jare- abuse

toıi- pour

para- speak

pare- speak

pa:r- laddle from one vessel to another

podi- cover (food, things etc.)

pol- stitch, sew

bare- draw (picture)

beraga:y- forget

S.3.2. INHERENT INTRANSITIVE

S.3.2.1. INTRANSITIVE - i

.3.2.1.1. -x ending stems

ayinx- become white (pounded rice)

arax- make loud noise

ạrax- dry up (water), become emaciate

ix-(ir-) be in a place

co:x- become red

co:lx- become tired

nilx- stand, stop

nërax- become grey

parax- crawl, wriggle on belly (child)

parax- be born

povïx- get maturity (fruit, grain, etc.)

ba:yibaḷax- rave

bo:damorax- become faint

S.3.2.1.2 Non -x ending stems

ay- become weary

aya- become loose

ayar- become weary

ali- melt as jaggery

uri- burning sensation is felt (in mouth, body etc.)

oyar- elevate (high)

oli- cure, get prosperity

oḷapa:y- be inserted, become near

ka:y- caw

kï:y- become rotten

kuḍï- shake (earth)

kurï- become short

ku:- crow

koṇi- pretend (lady)

ceḍi- be anger

cedi- break with crack

jotëlïri- accompany

ta:r- set (sun)

tiri- become known

teri- fall off

te:y- wear off

tori- swell

tore- wind (string) round and round

tolegiri- obstain

teli- be left from sleep

nayi- surpass

nali- live, play

nere- attain puberty

nov- pain

paccemé:y- graze (cattle)

pari- flow (water)

poy- be merged

poli- increase (crop, cattle etc.)

baya- become fear

ba:l-/ba:v- live

buddal- go to bed

bu:l- (*bu:v-*, *bud-*) fall down

bemmari- grieve

bey- be cooked

makkibu:l- lie down with faintness

madi- die

mammari- turn behind

mali- over flow (water)

S.3.2.2. INTRANSITIVE-2

S.3.2.2.1. Stems which take the transitive marker -x-

aña-	(*añax-*)	become white (rice) while pounding
ade-	(*adex-*)	close (hole or gap)
ay-/aya-	(*ayx-/ayax*)	loose
ari-	(*arix-*)	strain, sift
are-	(*arex-*)	grind with roller stone
arï-	(*arix-*	cut, part asunder
ali-	(*alix-*)	perish, destroy
ode-	(*odex-*)	break (pot etc.)
oli-	(*olix-*)	drop (fruits from the tree)

ïḍi-	(*ïḍi*x-)	break (wall)
kay-	(*kay*x-)	spend (time), celebrate
kari-	(*kari*x-)	char
kavin-	(*kavin*x-)	turn (face downwards)
kuy-	(*kuy*x-)	(become) dig
këṇi-	(*këṇi*x-)	entangle, get stuck
jaḷa-	(*jaḷa*x-)	sway (stick)
taḍï-	(*taḍï*x-)	obstruct
taṇi-	(*taṇi*x-)	cool down
tari-	(*tari*x-)	bend one side, cut into small pieces
tera-	(*tera*x-)	thresh about on ground
toyɐ	(*toy*x-)	(become) soiled
tori-	(*tori*x-)	pour (leak)
toli-	(*toli*x-)	peal
tï:r-	(*tï:r*x-)	exhaust, finish
tëḷi-	(*tëḷi*x-)	clean (water)
nera-	(*nera*x-)	fill
neri-	(*neri*x-)	become twist in an entangled fashion
nëḷi-	(*nëḷi*x-)	incline
paḍe-	(*paḍe*x-)	get mercy (from God)
pavï-	(*pavï*x-)	divide
pa:y-	(*pa:y*x-)	dash into go through
piri-	(*piri*x-)	disperse
poda-	(*poda*x-)	cover
pori-	(*pori*x-)	uproot, pull up
poḷi-	(*poḷi*x-)	demolish
baḷe-	(*baḷe*x-)	bend

biri–	(*birix–*)	open (jack fruit)
be:y–	(*be:yx–*)	warm, burn
mari–	(*marix–*)	roll, overflow
mare–	(*marex–*)	disappear, cover
muḍi–	(*muḍix–*)	exhaust, end
muy–	(*muyx–*)	avenge
muri–	(*murix–*)	cut, break
mey–	(*meyx–*)	pound (paddy)
me·y–	(*me:xy–*)	graze
se:r–	(*se·rx–*)	join

S.3.2.2.2. Stems which take the transitive marker *–t–*

S 3.2.2.2.1. –x ending stems

koḍax–	(*kaḍat–*)	cross
naḍax–	(*naḍat–*)	walk
nelax–	(*nelat–*)	wet
nenax–	(*nënat–*)	wet
paḍax–	(*paḍat–*)	giving offer
parax–	(*parat–*)	spread
barax–	(*barat–*)	fry
malax–	(*malat–*)	turn face upward

S.3.2.2.2.2. Non -x ending stems

ka:y–	(*ka:c–*)	heat, bask in sun
kuyn–	(*kuynd–*)	feel prickly
kora–	(*korat–*)	reduce
ki:r–	(*ki:t–*)	tear
gï:y–	(*gï:c–*)	mark by scratching

ca:y-	*(ca:c-)*	stretch out
taḷa-	*(taḷat-)*	become weak
ta:r-	*(ta:t-)*	lower, descend
te:r-	*(te:t-)*	grow (children)
të:r-	*(te:t)*	grow (children)
ne:r-	*(ne:t-)*	rise up, come to view
në:r-	*(ne:t-)*	hang
pa:r-	*(pa:t-)*	shake, winnow
pola-	*(polat-)*	dawn, spend night
pola-	*(polat-)*	live happily
bi:r-/bu:r-	*(bi:t-/bu:t-)*	open (flower)
boḷa-	*(boḷat-)*	grow (crop)

S.3.2.2.3. Stems which take the transitive marker *-p-*

ari-	*(arïp-)*	know
uḷi-	*(uḷip-)*	wander about
oḷi-	*(oḷïp-)*	hide
iḷi-	*(iḷïp-)*	descend, get ready, alight
ïḷ-(ë:-)	*(ëpp-)*	wake of
te:y-	*(te:p-)*	wear off
tëḷi-	*(tëḷïp-)*	leave (sleep)
piri-	*(pirïp-)*	return to our place, send back

S.3.2.2.4. Stem which takes the transitive marker *-k-*

koḍa- *(koḍak-)* shake (body)

S. 3.2.2.5. Stem which take the transitive marker *-ït-*

bar-(ba:-,bax-) *(barït-)* come

2.1. TRANSITIVE

As already noted a group of transitive verbs are made from intransitive verbs (See Intransitive-2) by adding certain suffixes. There are five transitive markers are in Kodagu, viz., *-t-*, *-k-*, *-p-*, *-ït-* and -x-. The occurrences of these markers have been already noted (See S.1.2.2, S.2.2.2 and S.3 2.2).

egs.	*a:ḍ-t- >a:ṭ-*	dance (S. 6 & 9)
	ka:x-t- >ka:t-	make to wait (S. 1)
	kuyn-t- >kuynd-	feel prickly (S. 22)
	adañg-k- > aḍak-	subjucate (S. 20)
	nugg-k- > nu:k-	push (S. 19)
	kalix-p- >kalïp-	make to increase (S. 1 & 25)
	ox-p- >opp-	make to agree (S. 1 & 21)
	eḷ-p- >ëpp-	make to wake up (S. 8 & 21)
	këḍ-ït-	make to spoil
	bar-ït-	make to come
	kay-x-t-e >kaycë	I spent the time (S 1 & 17)
	oḍe-x-p-a >oḍepa	he will break the pot (S 1)

2.2. CAUSATIVE

In Kodagu the causative verbs are formed by the addition of a morpheme of causation, viz, *-piciḍ-* and *-iciḍ-* to the verbal stem, whether those are transitive or intransitive. These two suffixes are phonologically conditioned since *-piciḍ-* occurs only after the -x- ending stems whereas *-iciḍ-* occurs elsewhere.

It is to be noted that in most of the Dravidian languages the causative suffix is usually added to a transitive verb only, but in Kodagu this is invariably added to all verbs.

egs.	*bax-picid-*	
	>bappicid-	cause to come (.S 1 & 21
	nilx-picid-	
	>nippicid-	cause to stop (S. 1,5 & 21)
	ma:d-icid-	cause to do
	o:d-t-icid-	
	>o:ticid-	cause to chase (S. 6 & 9)
	ari-icid-	
	>aricid-	cause to inform (S. 31)

2.3. FINITE VERBS

On morphosyntactic grounds (Krishnamurti, 1969:283) all verbs can be grouped into two categories viz., finite and non-finite. The main differences of these two are (1) the non-finite verbs do not possess person-reference whereas the finite verbs do and (2) syntactically the finite verbs function as predicates but the non-finite verbs as heads of subordinate clauses

The finite verb paradigms are again classified into seven types viz., tense, aorist future, negative, imperative, hortative, permissive and obligative or necessitive.

2.3.1. TENSES

There are two tenses in Kodagu, viz., past and non-past.

2.3.1.1. Past tense

The past tense formation is formed by the addition of the past tense marker to the stem followed by personal suffixes. As already noted Kodagu verbs are classified into three main classes on the basis of the allomorphs of the past tense morpheme. The allomorphs are 1. *-i-* (∾ *-n-*), 2. *-t-* and 3. *-nd-*. The suffix *-n-* is in freevariation with *-i-* before the pronominal terminations of first person singular, second person singular and plural. The changes, which are found in the case of dental suffixes i.e.. *-t-* > *ṭ, d, d* and *c* and *-nd-* > *dd, ṇḍ,* and *ñj* are taken into account by the sandhi rules.

egs.	*ëṇṇ-i-ë* >*eṇṇiye*	I said (S. 30)
	o:d-i-ci	we/he/she/they read
	po:x-i-ë >*po:yë*	I went (S. 30 & 31)
	po:x-n-ë >*po:në*	I went (S. 1)
	ëṇṇ-n-ë *ëṇṇïne*	I said (S. 28)
	kaḷx-t-ë *kaṭṭë*	I steal (S. 1.6.8 & 21)
	ayx-t-iya >*ayciya*	you sent (S. 1 & 17)
	kaṇ-t-ë >*kaṇḍe*	I saw (S. 6 & 22)
	bad-nd-e >*badde*	I lived (S. 45)
	ëd-nd-iya >*ëddiya*	you woke up (S. 45)
	bud-nd-etï >*buddëtï*	he fell down (S. 45)
	koḷ-nd-ë >*koṇḍë*	I was having (S. 7 & 8
	a:y-nd-ë >*a.ñje*	I choosed (S. 1 7 & 18)
	aṇi-nd-iya >*aṇiñjiya*	you wore (S. 17)

bax-nd-ëtï > *ba:tï* we/he/she/they/it came (S. 1.3.10 & 12)

tax-nd-ëtï > *ta:tï* we/he/she/they/it gave (S. 1.3.10 & 12)

It is to be noted that the past tense marker *-nd-* is absent before the pronominal suffix *-ëtï-* only in two verbs viz., *bax-* 'come' and *tax-* 'give'.

2.3.1.2. Non-past tense

The non-past tense is formed by the addition of non-past marker to a stem, followed by the personal suffixes. There are two morphemes viz., *-p-* and *-v-* found in Kodagu. These are morphologically conditioned since *-p-* occurs only after the stems ending with *-x-* and *-v-* occurs elsewhere.

egs. *ëdïx-p-i* > *ëdïpi* I (will) take (S. 1)

ix-p-iya > *ippiya* you will be there (S. 1 & 21)

erax-p-a- > *erapa* we/he/she/they will beg (S. 1)

toli-x-pi > *tolpi* I (will) peal (S. 1)

ma:r-v-a > *ma:ruva* it will change (S. 34)

ma:r-t-v-i > *ma:tuvi* I will sell (S. 16 & 34)

kol-v-i > *kovvi* I will get (S. 8 & 21)

ada-v-a > *adeva* gap will be closed (S. 24)

tadï-v-a > *tadeva* way will be obstructed (S.26)

kol-v-a he will kill

ë:-v-i I will get up

ca:-v-iya you (will) die

2.3.2. AORIST FUTURE

In the non-past construction the future and present notions coincide with a single form. Besides this, an

exclusive future tense construction, though there is no overt future tense marker, is also met with. This is called aorist-future, and the same is formed by suffixing *-u* to the stem It is also to be noted that 'classical Tamil, Malayalam and Telugu occationally form this aorist future by suffixing *-u* instead of *-um*' (Caldwell, 1956), but it is restricted to the third person singular neuter and the relative participle only. But Kodagu differs from this future, since in Kodagu *-u* is added to the verbal stems and the whole construction behaves like finite verb. Thus unlike Tamil, Malayalam and Telugu the Kodagu suffix *-u* occurs for all persons and numbers.

egs.	*nil*x*-u*	>*nikku*	(all persons) will stand (S. 1,2.5 & 21)
	*ba*x*-u*	>*bakku*	(all persons) will come (S. 1.2 & 21)
	are-u	>*areyu*	(the rice) will grind (S. 30)
	*are-*x*-u*	>*areku*	(all persons) will be ground (the rice) (S. 2)
	*uṇ*x*-u*	>*uṅgu*	(all persons) will eat (S. 2.22 & 23)
	ma:ḍ-u		(all persons) will do
	keyy-u		(all persons) will work

2.3.3. NEGATIVE

As in other Dravidian languages in Kodagu also the negative verb is found as a morphological structure, in which the negative marker occurs in the position of the tense marker Though the morphological negative construction is base + negative suffix + personal suffix in most of the Dravidian languages Kodagu has only one form

common to all persons and numbers. The negative marker *-a* is added to the base for this construction.

egs.	*bax-a* > *bakka*	(all persons) will not come (S. 2 & 21)
	ix-a > *ikka*	(,,) will not be (S. 2 & 21)
	ma:ḍ-a	(,,) will not work

Here is to be noted that this negative formation can be related to an aorist as found in Tamil (Caldwell, 1956:468).

In addition to this construction there are other three syntactic constructions to express time along with negation. For these constructions the word *-le / ille* is added to the tense mode stems and past verbal participle mode.

egs. 1. Past negative

bax-nd-le > *bandïle*	(subject) did not come (S.1 & 28)
koḍix-t-le > *koḍïtle*	(,,) did not give (S. 1)
o:ḍ-i-le	(,,) did not run

2. Non-past negative

o:d-v-le > *o:dule*	(subject) will not read (S. 34 & 44)
bax-p-le > *bappïle*	(subject) will not come (S. 1,21 & 28)
koḍïx-p-le > *koḍïple*	(subject) will not give (S. 1)

3. Perfect negative

no:ṭiṭï-ille > *no:ṭiṭille*	(subject) has not seen (S. 27)

tanditī-ille	
>*tandītille*	(subject) has not given (S. 27)
arīpitī-ille	
>*arīpitille*	(subject) has not informed („)

Here *-le-* is an alternant form of *ille*, the expression of complete negation, which is also same as in other languages like Tamil, Malayalam and Kannada.

2.3.4. IMPERATIVES

In all natural languages the ability of a verb is not the same. Kodagu language is not an exception. In Kodagu these verbs which can take command imperativet (Lakoff, 1966) are non-stative verbs and those which cannot take command imperative are stative verbs.

egs.	Non-stative		Stative	
	ma:ḍī	do	*co:*	become red
	ba:	come	*boḷī*	become white
	o:ḍī	run	*oṇaṅgi*	become dry
	o:di	read	*puṅṅi*	become decompose

Here non-stative verbs can alone be treated for imperative construction. It is also to be noted that in Kodagu as well as in other natural languages certain verbs which have only the inanimate nouns as the potential subject cannot be derived for imperative, for instance *minnī* 'become shine' *ma:jī* 'become soiled', *minjī* 'be left over' etc.

In Kodagu the command imperatives are again divided into two viz, positive imperative and negative imperative or prohibitive.

2.3.4.1. Positive imperatives

Positive imperatives are again classified into singular and plural imperatives.

(a) Singular

The singular imperative is derived from the verb stem itself. Here it should be noted that the second person singular of the imperative is generally identical with root or theme of the verb (Caldwell, 1956:530), and also this imperative can be employed when addressing children or inferiors (Arden, 1969:136). The singular imperative (in prohibitive also) is used to express or understand the pronoun *ni:*(*nï*) 'you', as its subject.

egs.	*nilx-* >*nillï*	stand (S.1,21 & 28)
	kol- >*kollï*	kill (S.21. & 28)
	ma:d- >*madï*	work (S.28)
	aṇi	wear
	ari	find out

(b) Plural

The Plural imperative is formed by adding *-iri* to the stem. This imperative is used to express or understand the pronoun *niṅga* 'you (pl.)' as its subject. And also to be noted that the plural imperative form is used as honorific singular imperative in Kodagu.

In addition to the plural imperative marker *-iri* the marker *-i* also occurs in free variation after the stems ending with consonant except *-y*.

egs.	*nilx-iri >nilliri*	stand (S.1 & 21)	
	nilx-i >nilli		
	o:d-iri	read	
	o:d-i		
	ma:d-iri	work	
	ma:d-i		
	ayx-iri >ayri	send (S.1 & 31)	
	ba:-iri >ba:ri	come (S. 31)	
	ta:-iri >ta:ri	give („)	
	u:-iri u:yiri	plough (S. 30)	

2 3.4.2. Negative imperative (Prohibitive)

The Negative imperative is formed by adding *-ate* and *-ati* to the verb stem for second person singular and plural respectively. The suffixes *-ate* and *-ati* can be segmented into two elements as *-at-*, negative marker; *-e*, second person singular marker (§2.3.8.3) and *-i*, second person plural marker (§ 2.3.8.4). Then the formation of the negative imperative is the verb stem, with or without the transitive marker plus negative marker plus the second person marker.

egs.	*pa:d-at-e*	don't sing -you-sg.
	ka:k-at-e	don't invite -you-sg.
	nadax-at-e >*nadakate*	don't walk -you-sg. (S.2)
	o:d-at-i	don't run -you-pl.
	tëlix-at-i >*tëlikati*	don't laugh -you-pl. (S.2)
	ma:r-t-at-i >*ma:tati*	don't sell -you-pl. (S.16)

2.3.5. HORTATIVE

In *Kodagu* the hortative construction is formed by adding the hortative marker *-aḍï* to the stem and this is used with respect to the third person only. It is involved only in the grammatical opposition of assertion *-i.e*, occurs in the positive construction.

It is also to be noted that the hortative is used as a kind of permissive in the case of first person. This has also only *assertion positive. For first person singular it is* used only in the interrogative construction but for plural it is used in the affirmative as well as in the interrogative constructions, where the hortative marker is represented by ϕ.

egs.	*no:ṭ-aḍï*	let (some one) look
	bax-aḍï > *bakkaḍï*	let (some one) come (S.2&21)
	ma:ḍ-aḍï-a: > *ma:ḍaḍa:*	shall I do? (S.27)
	po:-aḍï-a: > *po:ḍa:*	shall I go? (S.27&39)
	po:x-ϕ-aṅga > *po:ka*	let us go? (S. 2 & 33)
	po:x-ϕ-aṅga-a: > *po:ka:*	shall we go? (S. 2, 33 & 39)
	nilx-ϕ-aṅga-ala > *nikkala*	shall we stand (S. 2,5,21&33)

2.3.6. PERMISSIVE

Permissive is one of the verbal moods which indicates permission to perform the action. In Kodagu one and the same suffix is used for all persons. The suffix *-alu* is found in Kodagu for permissive construction.

egs.	*o:ḍ-alu*	(subject) may run
	po:-alu >po:lu	(subject) can go (S. 39)
	tinx-alu> tiṅgalu	(subject) can eat (S. 2,22&23)
	nilx-alu >nikkalu	(subject) can stand (S.2,5 & 21)

2.3.7. OBLIGATIVE

Obligative mood can be classified into two viz., affirmative and negative in Kodagu. For affirmative and negative construction *-aṇḍu* is added to various main verbs to express obligation or necessity and for negative construction *-aṇḍa* is added to stem. Both of these constructions are used with all pronouns, to express or understand, as its subject.

egs.	*bax-aṇḍu >bakkaṇḍu*	(one) must come (S. 1 & 21)
	bax aṇḍa >bakkaṇḍa	(one) must not come (S 1 & 21)
	keyy-aṇḍu	(one) must do
	keyy-aṇḍa	(one) must not do
	o:d-aṇḍu	(one) must read
	o:d-aṇḍa	(one) must not read

2.3.8. PRONOMINAL SUFFIXES

It is well known fact that in Dravidian languages the pronominal suffixes of verbs show close similarity to the corresponding personal or demonstrative pronouns. Among all the Dravidian languages Malayalam is the only language which has lost the pronominal suffixes

gradually from period to period in the finite verb (Ramaswami Aiyar, 1936·52–62). But in Kodagu the persons of the verb are formed by adding the pronominal suffixes to various categories like tense, negative, imperative etc The pronominal suffixes are grouped into three viz., first person, second person and third person with singular plural distinction.

2.3.8.1. First person singular

In Kodagu it is represented by *-ë* and *-i* in past and non-past conjugations respectively.

egs.	*ëlïd-n-ë* >*ëlïdïnë*	(I) wrote (S. 28)
	tod-t-ë >*tottë*	,, touched (S. 6,9, & 21)
	kejj-t-ë >*kejjë*	,, worked (S. 36)
	ënn-v-i >*ënnuvi*	,, will say (S. 34)
	bax-p-i >*bappi*	,, will come (S. 1 & 21)

2.3.8.2. First person plural

Without the distinction between inclusive and exclusive meanings like many other languages there are three suffixes viz., *-a*, *-ëtï* and *-ci* found in Kodagu in finite verbs for denoting first person plural. Of these, the suffix *-a* occurs only in the non-past construction, the suffix *-ëti* occurs after the past tense markers *-t-* and *-nd-* and the suffix *-ci* occurs after the past tense marker *-i-*. Here is to be noted that these markers coincide with those of third person also.

egs.	*naṅga tori-v-a*	we (will) pour
	naṅga urpuva (<*urp-v-a*)	we (will) blow (S. 34)

naṅga uṇḍëti

(<*uṇx-t-ëti*) we ate (S. 1 & 22)

naṅga naḍandëti

(<*naḍax-nd-ëti*) we walked (S. 1)

naṅga ma:d-i-ci we worked

naṅga kalakici

(<*kalaṅg-k-ici*) we stirred (S. 20)

In addition to the markers, the suffix *-aṅga* is also found in the hortative construction as given below.

egs. *a:ḍ-aṅga* let us dance

ka:ṇx-aṅga

>*ka:ṅga* let us see (S.2.22.23 & 33)

uṇx-aṅga >*uṅga* let us eat (,,)

2.3.8.3. Second person singular

There are two suffixes viz., *-iya* in the tense conjugated words and *-e* in the negative imperative construction used for denoting second person singular pronominal suffix.

egs. *tupp-v-iya*

>*tuppuviya* (you) will spit (S. 34)

po:x-p-iya

>*po:piya* (you) will go (S. 1)

kol-nd-iya

>*kondiya* (you) killed (S. 5)

baḷix-t-iya

>*baḷiciya* (you) pulled (S. 1 & 17)

o:ḍ-at-e (you) don't run

nippiciḍ-at-e (you) don't make to stop

2.3.8.4. Second person plural

-ira, *-iri* and *-i* are used as pronominal suffixes for second person plural in Kodagu. *-ira* occurs only in tense construction, *-iri* occurs only in positive imperative construction and *-i* occurs in negative imperative construction.

egs.	*namb-v-ira*	
	>nambuvira	(you) will believe (S.34)
	namb-i-ira	
	>nambira	(you) believed (S.31)
	keyy-v-ira	
	>keyyuvira	(you) will do (S.34)
	kejj-t-ira	
	>kejjira	(you) did (S.36)
	ma:ḍ-iri	(you) do
	ma:ḍ-at-i	(you) don't do

2.3.8.5. Third person

Generally the gender distinction in Dravidian is observed by the third person pronouns (demonstrative pronouns) and the third person pronominal suffixes in the finite verbs. As already noted, there are four genders in Kodagu viz., masculine, feminine, epicene plural and neuter; but this distinctions are not found in the finite verb. The first person, the second person and the third person distinctions are only found in Kodagu. And also it is worth mentioning that the first person plural suffixes viz., *-a*, *-ëtï* and *-ci* are also used for third person; so that the personal differences are to be differentiated only on the basis of the occurrences of the subject i.e., pronouns.

egs.	*avën bappa* (<*bax-p-a*)	he will come (S. 1 & 21)
	ava ma:ḍuva (<*ma:ḍ-v-a*)	she will work (S. 34)
	ayṅga timba (<*tinx-p-a*)	they will eat (S. 1,22 & 23)
	adī o:ḍuva (<*o:ḍ-v-a*)	it/they will run (S. 34)
	avèn ba:tï (<*bax-nd-ëtï*)	he came (S. 1,3 & 12)
	ava ta:ti (<*tax-nd-eti*)	she gave (,,)
	ayṅga geddètï (<*gedd-t-ëti*)	they won (S. 36)
	adì nindèti (*nilx-nd-ëti*)	it/they stood (S. 1 & 5)
	avèn ma:ḍ-i-ci	he did
	ava o:d-ici	she read
	ayṅga naḍatici (<*naḍax-t-i-ci*)	they celebrated (S. 1)
	adï o:ḍ-i-ci	it/they ran

2.4. NON-FINITE VERBS

Morphologically, a non-finite verb does not carry person-number in agreement with the subject; but syntactically they are either adverbial or adjectival and do not occur as predicates in sentences. All the non-finite verbs in Kodagu can be classified into aspect-based and tense-based verbs. There are six constructions viz., infinitive, simultaneative, resultative, conditional, verbal participle and adjectival participle in this language.

2.4.1. INFINITIVE

The infinitive is a simple morphological structure in Dravidian but its syntactical functions are many. Even though the infinitive is used to express a variety of meanings (Agesthialingom, 1969), the principal meaning of the infinitive is *purpose*. Though the infinitive is formed by the addition of the suffix *-a* to the verb stems in Proto-Dravidian in many languages like Kannada, the Kolami-Parji group, Konda-Pengo and Brahui the original infinitive has been replaced by the verbal noun. In Kodagu also it seems that the infinitive is used by the verbal noun plus the dative case marker *-ki*. According to Caldwell also, the infinitive can be substituted by verbal nouns but these infinitives do not take any other case signs. But the verbal nouns can be declined to any case. Even if it seems to be declined to dative case in Kodagu, the original case construction with the verbal noun is different from the infinitive construction. For instance the case markers accusative, dative and genitive cases are preceded by the link-morph *-a:n-* in the case of verbal noun as follows:

ma:duvë–a:n–a	
>ma:duva:na	the act of working'(Acc.)(S.12)
bappë-a:n-ki	
>bappa:ṅgï	for coming (Dat.)(S.12,22&23)
o:duvë–a:n-ḍa	
>o:ḍuva:ṇḍa	of the running (Gen.) (S 12 & 23)

Here *-kï* is therefore to be taken as an infinitive marker in Kodagu and the formation of the infinitive is verbal noun plus the infinitive marker *-kï*.

egs.	*keyy-vë-kï*	
	>keyyokï	to do (S.34 & 35)
	nadax-t-vë-kï	
	>nadatokï	to celebrate (S.1,34 & 35)
	bax-pë-kï	
	>bāppëkï	to come (S.1 & 21)

2.4.2. SIMULTANEATIVE

This feature is formed by adding the suffix *-ane* to the verb stems in the sense of 'as soon as' or 'at the time of'.

egs.	*o:d-ane*	as soon as (some one) read
	ka:k-ane	as soon as (some one) invite
	bax-ane >bakkane	at the time of coming (S.2 & 21)

2.4.3. RESULTATIVE

When two actions are related as cause and effect the verb denoting the second in the pair occurs only due to the result of the first verb; because the first occurs in the resultative. In Kodagu the resultative is formed by the addition of *-ino* to the past tense-mode stems.

egs	*tinx-t-ino*	
	>tindino	because of eating (S.1,22 & 23)
	mi:nd-i-ino	
	>mi:ndino	because of swimming (S.31.)
	ëdix-t-ino	
	>ëditino	because of taking

2.4.4. CONDITIONAL

The verb of conditional shows a subordinate clause, meaning 'if', 'if not' etc. In Kodagu, the suffix *-e:ṅgi* is added to the tense marker and the negative marker *-at-* to express a conditional action preceding some other action in time.

The suffix *-e:ṅgi* has two other variants viz; *-ce:ṅgi* and *-eṅgi*, of which *-ce:ṅgi* occurs only after the past tense marker *-i* and *-eṅgi* occurs in the compound verb construction.

egs.	*ṅamb-n-e:ṅgi*		
	>nambïne:ṅgi	if some òne believes	(S.28)
	namb-i-ce:ngi	if some one believes	
	aḍix-p-e:ṅgi		
	>aḍipe:ṅgi	if some one beats	(S.1)
	o:d-at-e:ṅgi	if some one not read	
	o:ḍiḍ-ṭ-eṅgi		
	>o:ḍiṭeṅgi	if some one has run away	(S. 6 & 9)
	bandir-t-eṅgi	if some one has come	

It is worth mentioning that this *e:ṅgi* of Kodagu can be derived from **en-kil* the conditional of *en-* 'to say' (Subrahmanyam, 1971:235).

2.4.5. VERBAL PARTICIPLES

The verbal participle is meant for an incomplete verb which requires a finite verb to complete it. This is referred by different names viz., adverbial participle by Pope (1937) and gerund by Beschi (1848).

The verbal participles can be classified into two viz. past adverb and negative adverb since the verbal participles are formed by the addition of the verbal participle suffix, to the past tense markers and negative marker *-at-*

2.4.5.1 Past adverb

Regarding past adverb in Kodagu, the past stem itself functions as the past adverb as in other South Dravidian languages. But it is optionally extended by suffix *-iti* in Kodagu whereas *-t-* in Kota and a sibilant in Toda (Subrahmanyam, 1971:227). And also itis to be noted that the suffix *-iti-* can be treated for the verbal participle of the past perfective but there is no difference between past and perfect in Kodagu language. Therefore the unmarked feature and the suxffix *-iti* are taken here as the past adverbial marker.

egs.	*bax nd-ϕ >bandi*	having come (S 1 & 28)
	bax-nd-iti	
	>banditi	having come (S. 1)
	o:d-i-ϕ	having read
	o:di-iti>o:diti	having read (S. 31)

2.4.5.2 Negative adverb

The negative adverb is formed by the addition of the marker *-e* to the negative stem.

egs.	*ma:d-at-e*	without doing
	no:t-at-e	without looking
	ma:r -t-at-e	
	>ma:tate	without selling (S. 16)
	tinx-at-e	
	>tiṅgate	without eating (S.2.22,&23)

2.4.6. RELATIVE PARTICIPLES (Adjectival participle)

Relative participle is a simple category from the morphological point of view as it is found in all the Dravidian languages except Brahui. There are three forms of the adjectival participle in Kodagu viz., past, non-past and negative. They are derived by adding *-ë* to the past, non-past and negative stems. This can be called as noun-complement because it requires the complement of a noun to complete its signification (Caldwell, 1956:521).

egs	*bax-nd-ë* *bandë*	that-came (S. 1)
	naḍax-t-i-ë >*naḍatiyë*	that-celebrated (S. 1 & 30)
	ma:ḍ-v-ë >*ma·ḍuvë*	that-does (S. 34)
	nilx-p-ë >*nippë*	that-stands (S. 1, 5 & 21)
	bar-at-ë	that-not come
	bax-at-ë >*bakkattë*	that-not come (S. 2 & 21)
	noṭ-at-ë	that-not seen

2.5. DEFECTIVE VERBS

There are some verbs in Kodagu, which cannot be fully conjugated like other verbs. Unlike appellatives these verbs are not conjugated for gender number and these forms are termed as defective verbs. They are always used as impersonal.

2.5.1 *bo:ṇḍ-* 'oblication'

The conjugated forms are as follows:

bo:ṇḍ-u (some one) need (some thing)

bo:nd-a	(some one) don't need
bo:nd-iye	that which is needed
bo:nd-atë	that which is not needed
bo:nd-iyadï	thing which is needed
bo:nd-atadï	thing which is not needed

In using these words the required object is put in the nominative case, the person who wants it in the dative case. Consider the following examples.

1. *na:kï* *pana* *bo:ndu*
'to me' 'money' 'need'
I need money

2. *ni:ki* *pa:lï* *bo:nda*
'to you' 'milk' 'not need'
You don't need milk

3. *idï* *ni:ki* *bo:ndiye* *sa:ma:na*
'this' 'to you' 'that-needed' 'thing'
This thing is meant for you

4. *adï* *avëngï* *bo:ndate* *pustaka*
'that' 'to him' 'that-not needed' 'book'
That book is not needed for him

5. *idï* *avaki* *bo:ndiyadï*
'this' 'to her' 'thing-needed'
This thing is needed for her

6. *adï* *ningakï* *bo:ndatadï*
'that' 'to you' 'thing-not needed'
That is not needed for you

It is to be noted that all the words except the negative forms mentioned above have corresponding alternant forms which act as auxiliary verb to another verb to express. necessity or urgency. The alternant root for *boṇḍ-* is *-aṇḍ-* in Kodagu as found in the following sentences.

7. *na·nï ma·d-aṇḍ-u*

   I must do

8. *avën o:d-aṇḍ-a*

   He must not read

9. *ni:kï kodïk-aṇḍ-iyë paṇa*

   The money which must be given to you

10. *adï na:nï ma:ḍ-aṇḍ-iyadï*

    That is what I ought to do

It is worth mentioning that in Kodagu the regular transitive verb *bo:ḍ-* 'entreat' can be compared with the defective verb *bo:ṇḍ-*. The verb *bo:ḍ-* can be conjugated fully as in Tamil *ve:ṇḍ-* 'entreat'.

2.5.2. *kay-* 'can'

In Kodagu there is a complete verb *kay-* 'spend time' with transitive as well as intransitive distinction. For instance,

na:nï kay-c-ë	I spent (the time).
tiṅga kay-ñ j-ëtï	Month was passed.

It may be noted here that this verb is different from the defective verb *kay-* 'can' because the defective verb is conjugated only for limited forms as follows,

1. Positive form

   na:kï kayyu I can be able

2. Negative form

aveṅgï kayya He cannot be able

3. Interrogative form

ni:kï kayyuva? Can you be able?

4. Negative adverbial form

avakï kayyate, ivën ma:ḍici

As she was not able, he did

5. Negative adjectival form

idï kayyatë paṇi

This is the work of not able to do

6. Participial noun form

avën kayyataven

He is a man of inability

Of the above forms the verb *kay-* seems to be an independent verb but it is sometimes treated as an auxiliary verb by adding it to the infinitive of a verb in Kodagu.) Consider the following examples.

o.dokï-kayyu
 >o:dokayyu (some one) can read (S. 42)

ma:ḍoki-kayya
 >ma:ḍokayya („) cannot do („

bappëki-kayyuva:
 >bappëkayyuva: („) can come („)

ëḍïpëki-kayyate
 >ëḍïpëkayyate without able to take („)

timbëkï-kayyatë
 >timbëkayyatë that which is not able to take (S. 42)

Since the above constructions are originally realised as an infinitive + *kay–* it is considered as an auxiliary verb for designing the meaning 'possibility'.

2.5.3. *a:g–* 'suit, fit, proper'

The verb root *a:g–* has another varient form *a:x–*, which is used as a defective verb in the future singular neuter positive construction as *a:x–u* >*a:ku* 'it is proper' (S. 2) but the root *a:g–* occurs only in the negative form as, *a:g–a* 'it will not suit or fit or be proper'.

There is also another intransitive verb *a:–(a:g–/a:x–)* 'become, happen', which can be compared with this defective verb. In Kodagu the form *a:ga* also functions as an auxiliary verb when it is added with the infinitive form of a verb, then it means 'not to be done' for designating the prohibitive.

egs.	*no:ṭoki–a:ga*		
	>*no:ṭoka:ga*	should not see	(S. 27)
	bappëkï–a:ga		
	>*bappëka:ga*	should not come	(,,)
	naḍapëkï–a:ga		
	>*naḍapëka:ga*	should not walk	(,,)

It is seen so far that the defective verbs are used as auxiliary verbs in Kodagu. These auxiliary verbs behave differently from the main verbs and other auxilaries since these verbs occur only after the infinitive of the main verb. These auxiliaries are treated as modals (Schiffman, 1969:8–14).

It is worth mentioning that among the modals in Kodagu the obligative modal *aṇḍ-* is considered to occur after the verb stem but it can be analysed as infinitive + *aṇḍ* as in the case of *ma:ḍ-aṇḍ-*, *o:d-aṇḍ-*, etc., where infinitive is represented by the stem itself. A similar instance is noticed in Tamil in expression like *ceytakka* 'things which have to be done' (Thirukkural, 466), where the infinitive is simply marked by the verbal base *cey-* 'to do'.

2·6. APPELLATIVE VERBS

Appellative verbs are those which cannot take tense imperative and infinitive suffixes like ordinary verbs, but take other verbal suffixes like those of relative participle, verbal participle, conditional, participial noun and qualitative. There are only eleven roots grouped under appellative verbs in Kodagu. They are as follows.

1.	*al- / allat-*	not (mere negation)
2.	*il- / illat-*	not exist
3.	*uḷ- / uṇ-*	exist
4.	*èḷi-*	poor
5.	*èḷe-*	young
6.	*ceri-*	small
7.	*nal-*	good
8.	*paḷë-*	old
9.	*pudï*	new
10.	*perï-*	big
11.	*balli-*	strong

2.6.1. All roots except the first three take only the relative participle marker *-ë* and participial noun markers *-avën, -ava, -ayṅga* and *-adï*.

2.6.1.1. Relative participle

ëḷï-ė >ëḷiyë	easy things	(S. 26 & 30)
ėḷe-ë >ëḷeye	young one	(S. 30)
ceṛï-ë >ceṛiyë	small things	(S. 26 & 30)
nal-ë >nallė	good things	(S. 21)
paḷë-ë >paḷëyë	old things	(S. 30)
pudï-ë >pudiyë	new things	(S. 26 & 30)
peṛï-ë >peṛiyë	big things	(,,)
balli-ë >balliyė	strong one	(S. 30)

2.6.1.2. Participial nouns

ëḷi-avën >ëḷiyavën	he who is simple	(S. 30)
ëḷe-ava >ëḷeyava	she who is young	(,,)
ceṛï-ayṅga >ceṛiyayṅga	they who are small	(S.26&30)
nal-adï >nalladï	it which is good	(S. 21)
paḷė-adï >paḷëyadë	that which is old	(S. 30)
pudï-avën >pudiyavën	he who is new	(S. 26 & 30)
peṛï-ayṅga >peṛiyayṅga	they who are great	(,,)
balli-ava >balliyava	she who is strong	(S. 30)

2.6.1.3. Qualitative nouns

The qualitaitve suffixes *-ndï* and *-me* are added to the roots *nal-* and *pudi-* respectively in Kodagu for forming the following nouns.

nal-ndi >*nandï*	good (S. 5)
pudï-me	new

2.6.2. *il-* and *al-*

The root *il-* denies existence and it is the opposite of *ir-* and *ul-* 'exist'. The root *al-* denies a quality or statement implying that a different quality exist instead of the one mentioned or that a different statement should take the place of the one denied.

The following forms are derived from the roots *il-* and *al-*.

9.6.2.1. Finite verb forms

ille	no, not
alle	not so

2.6.2.2. Verbal participle forms

illate	without
allate	except, or

2.6.2.3. Relative participle forms

illate	without
allate	not being

2.6.2.4. Participial nouns

illatavën	he who is not having
illatava	she -id-

illatayṅga	they who are not having
illatadï	it which is not having
allatavën	he who is not
allatava	she -id-
allatayṅga	they who are not
allatadï	it which is not

In Kodagu the forms *ille* and *alle* are used for all genders, persons and numbers but the difference in the use of *ille* and *alle* must be carefully noted. The former denies existence but the latter only denies the assertion made or implied about the noun or pronoun.

For example,

1. *na:ḍalli paṇa ille*

   I have no cash

2. *idï na:ḍa paṇa alle*

   This is not my money

The verbal participle form *illate* is used for the meaning 'without'.

eg. *paṇa illate ondu no:ṭoka:ga*

Without money no one is to be seen

But on the other hand the form *allate* is used in,

(1) the sense of 'except, besides, but'

eg. *i: kiṇṇe allate bo:re ïlle*

Except this boy nobody is there

(2) the sense of 'either - - or'

eg. *i: pustaka allate a: pustaka*

Either this book or that book

and (3) the sense of 'not only.........but also'

eg. *avën no:ṭici allate aḍicëti*

He not only saw but also beat

The relative participles *illatë* and *allatë* are basically different in their usages.

egs. 1. *ava illatë mane, maneyille*

The house which is without her, is not a house

2. *idi në:ri allatë takkï*

This is a word that is not truth.

Here the word *allatë*, meaning 'not being', is added to the noun or other term

2 6.3. *uḷ-*

The root *uḷ-* expresses existence. The following verbal forms viz., *uṇḍï*, *uḷḷë* and *uḷḷavën* / *uḷḷava* / *uḷḷayṅga* / *uḷḷadï* are derived from this root.

2.6.3.1. The word *uṇḍï* expresses either present or past time and takes a subject of any gender and number i.e., the third person as well as the first person plural. *uṇḍï* simply states that its subject exists, perhaps implying more or less continuous or permanent existence.

egs. 1. *naṅga maneli uṇḍï*

We are in the house

2. *avën to:ṭatlï uṇḍï*

He is in the garden

3. *ava oḷïli uṇḍi*

She is inside

4. *ayṅga manelï uṇḍï*

They are in the house

5. *adï ka:ḍïlï uṇḍï*

It is in the forest

It is worth mentioning that the verbs *ille* and *uṇḍï* are taken by Tamil Grammarians as defective finite verb (Nannul, Sutram, 339).

2.6 3.2. The word *uḷḷë* is used in (1) the sense of expressing present time and takes a subject of first person singular and second person.

egs. I. *na:nï alli uḷḷë*

I am there

2. *ni:nï alli uḷḷë*

You are there

3. *niṅga alli uḷḷë*

You (pl.) are there

and (2) the sense of expressing relative participle with the meaning 'being'.

egs. 1. *alli uḷḷe sa:ma:na*

The things which are there

2. *avën buddi uḷḷe kïṇṇe*

He is a boy who is intelligence

It is to be noted that if the word is added to any abstract noun as found in the above example (2), the phrase *buddi uḷḷë* is equivalent to an adjective qualifying the following noun.

2.6.3.3. The participial nouns viz., *uḷḷavn̆, uḷḷava, uḷḷayṅga* and *uḷḷadï* are also derived from the root *uḷ-* and mean 'he who possesses the quality', 'she who possesses the quality', 'they who possess the quality' and 'it which possesses the quality' respectively in Kodagu.

2.6.4. In addition to the above verbal qualities, the conditional marker *-e:ṅgi* 'if' is also added to the roots *illat-* and *allat-* and the word *uṇḍï*.

egs.	*illat-e:ṅgi*	if it is not
	allat-e:ṅgi	if it is not so
	uṇḍï-e:ṅgi	
	>*uṇḍe:ṅgi*	if it is (S. 27)

2.7. COMPOUND VERBS

Compound verbs are simple morphological construction in which the first sequence may be verbal participle or infinitive or noun or adverb and the second sequence will be a main verb or defective verb or auxiliary verb. Compound verbs in Kodagu can be classified into three viz, coordinate compounds, subordinate compounds and noun plus verb compounds.

2.7.1. COORDINATE COMPOUNDS

Coordinate compound verbs are rare in Kodagu. There are only three verbs, which contain past verbal participle plus main verb.

egs.	*koṇḍï ba:*	bring
	ëḍiṅï koḍï	buy
	kaṇḍï puḍï	investigate

Here the verbs *ba:* 'come', *kodï* 'give' and *pudi* 'hold' are added with past verbal participle as shown in the above examples and these compounds show a single verbal meaning and this contains the expression of two successive actions.

2.7.2. SUBORDINATE COMPOUNDS

These compounds are formed by adding auxiliary verbs to the infinitive or verbal participle of the main verb. Here the main verb will be the carrier of the meaning while the auxiliary only modifies it in some manner.

The compounds, containing the infinitive of the main verb puls auxiliaries have been explained under defective verbs (§ 2.5), and they can be named as *modal compounds*. Here the compounds, formed by the addition of a kind of auxiliary with verbal participle of the main verb and these are named as *aspectual compounds*. The main difference between the modal compounds and aspectual compounds is that in modal compounds an auxiliary verb is used for indicating mood; i. e, manner or aspect of the action denoted by the verb with which it is used whereas in the aspectual compounds with reference to verbs, a category indicating wether the action or state denoted by the verb is viewed as completed or in progress as instantaneous or enduring, as momentary or habitual, etc.

There are three types of aspectual compounds viz, perfective, completive and reflexive

2.7.2.1. Perfective

The auxiliary verb *irï* is added to the past verbal participle of other verbs, in order to show the perfective mood in Kodagu.

egs.	*ma:ḍi–irï*	
	>ma:ḍirï	be doing (imp. sg.) (S. 31)
	ma:ḍi–irï–vi	
	>ma:ḍiruvi	(I) will be doing (S. 26&31)
	band–irï-va	
	>bandiruva	(we) will be coming (S. 26)
	tand-irï–të	
	>tandirtë	(I) have given (S. 27)
	tand–irï–tëtï	
	>tandirtï	(we) have given (S. 27&32)
	po:yi–irï–tëtï	
	>po:yirtï	(they) have gone (,,)

2.7.2.2. Completive

The completive mood is formed by the addition of the auxiliary verb *iḍ–* to the past verbal participle of the main verb.

egs.	*no:ṭi–iḍ >no:ṭiḍï*	look up (imp. sg.) (S. 28&31)
	ëḍït–iḍ–ṭë >ëḍïtiṭë	(I) have taken up (S. 6 & 9)
	këḍïti–iḍ–ṭira	
	>këḍïtïṭira	(you pl·) have spoiled away (S. 6,9 & 31)
	ma:ḍi–iḍ–tëtï	
	>ma:ḍiṭëtï	(we) have done it (S. 6,9&31)

2.7.2.3. Reflexive

The reflexive meaning is given by adding the verb *-oḷ* or *-a* to the past verbal participle of another verb. This form shows that the action denoted by the verbal participle is done in reference to the subject. The variants *-oḷ* and *-a* are morphologically conditioned in Kodagu; the former occurs before the plural imperative marker *-i*, and the past tense marker *-nd* and the later occurs before the singular imperative (realized as zero) and non-past marker *-v-*.

egs.	*ma:ḍi-ol-i*	
	>ma:ḍiyoḷi	do yourself (pl.) (S. 30)
	nind-oḷ-i	stand yourself (pl.)
	band-oḷ-nd-ë	
	>bandeṇḍë	(I) came myself (S. 7,8. & 14)
	tind-a	eat yourself (sg.)
	kond-a-va	(we/he/she/it) will kill (oneself)
	o:di-avira	
	>o:diyavira	(you-pl.) will read yourself (S. 30)
	**budd-a*	go to bed (imp.-sg.)

*It is worth mentioning that in Kodagu *budda* 'go to bed' is derived from verb root + past + reflexive, i.e., *bud+nd+a*. Actual meaning of this word must be 'fell down yourself (sg.)' but the meaning found in Kodagu is 'go to bed'. This change may be due to the extension of that semantic feature.

It may be noted that the verbal participle with *-oḷ* is also used to express a continuous action.

egs. *avën no:ṭiyëṇḍï po:ci*
He went by looking

na:nï o:ḍi yëṇḍippi
I will be reading

ni:nï o:ḍiyëṇḍiñjiya
You (sg.) were running

2.7.3. NOUN-VERB COMPOUNDS

Noun-verb compound is a common feature in many languages and Kodagu is not an exception. There are many nouns immediately followed by a set of verb roots which are generally called as verbalizers which constitute nucleus of compound morphological constructions with idiomatic meanings in Kodagu. The nouns immediately followed by the verbalizers can be treated as psuedo-noun stem. In Kodagu the verbalizers are generally pure verbs but in some instances *-i* is used as verbalizer.

2.7.3.1. *-i*, used as verbalizer

anubava-i >*anubavi* to experience good or bad (S.60)

anuma:na-i
>*anuma:ni* to infer (S.60)

abima:na-i >*abima:ni* to honour, to esteem (S.60)

2.7.3 2. *ma:ḍ-* to do

avama:ḍ-	to change the order or arrangements
uddama:ḍ-	to make long, to dilute
ëḍama:ḍ-	to play together

kammima:ḍ-	to reduce
ka:limaḍ-	to vacate
ca:pamaḍ-	to print
naḍanama.ḍ-	to dance

2.7.3.3. *paḍ-* to be experienced

abipra:yapaḍ-	to think over it
asu:yepaḍ-	to envy
a:nandapaḍ-	to amuse
iṣṭapaḍ-	to desire
ulla:sapaḍ-	to become merry
oḷepaḍ-	to be included
kaṣṭapaḍ-	to suffer
pa:ḍïpaḍ-	to work hard
pratipaḍ-	to challenge
saripaḍ-	to become correct
sukapaḍ-	to become cure
stirapaḍ-	to become permanent

2.7.3.4. *ïḍ-* to put

ka:lïḍ-	to punish
kuṇḍïkïḍ-	to burry
guri-ïḍ-	
>guriyïḍ-	to aim at (S.30)
dage-ïḍ-	
>dageyïḍ-	to cheat (S.30)
raṅgï-ïḍ-	
>raṅgïḍ-	to dye (S.27)
raṭṭï-ïḍ-	
>raṭṭïḍ-	to do book binding (S.27)

2.7.3.5. *buḍ-* to leave

a:śebuḍ-	to despair
kaybuḍ-	to omit
baḷibuḍ-	to breath

2.7.3.6. *a:ḍ-* to dance

ka:pa:ḍ-	to protect
koṇḍa:ḍ-	to praise
pareda:ḍ-	to search

2.7.3.7. *a:ṭ-* make to dance or to drive

ayla:ṭ-	a kind of dance
ucce-a:ṭ- >*ucca:ṭ-*	to urinate (S.60)

2.7.3.8. *ku:ḍ-* to become together

kayku:ḍ-	to get success
saraku:ḍ-	to become one side

2.7.3.9. *ku:ṭ-*

kayku:ṭ-	to take over
ca:ykuṭ-	to clean
tuḷiku:ṭ-	to dilute
busīku:ṭ-	to hiss
saraku:ṭ-	to make (it) one side

2.7.3.10. *malaṅg-* worship

kaymalaṅg-	to bow with hands jointly

2.7.3.11. *muṭṭ-* to touch

kaymuṭṭ- to shake hand

2.7.3.12. *me:ṅg-* to mix throughly

ëḍame:ṅg- to mingle

2.7.3.13. *puḍi-* to hold

marapuḍi- to become numb

2.7.3.14. *paḍi-* to learn

ba:ypaḍi- to hawk out

2.7.3.15. *baḷa-*(<*boḷa*) to open

ba:yibaḷa- to rave

2.7.3.16. *mara-* to forget

bo:damara- to become faint

2.7.3.17. *pa:y-* to dash into

oḷapa:y- to insert

2.7.3.18. *ëḍï-* to take

kaḍekëḍï- to have monetary transaction
kryakëḍï- to buy
dattëḍï- to adopt (child)

2.7.3.19. *a:y-* to choose

beraga:y- to forget

2.7.3.20. *me:y-* to grace

paççeme:y- to grace (grass)

2.7.3.21. *aḍi-* to blow

accaḍi-	to print

2.7.3.22. *aḷa-* to sit

paraṇḍaḷa-	to take oath

2.8. PARTICIPIAL NOUNS

Participial nouns indicate the doer of the action of the verb (Arden, 1891:216). In Kodagu, the participial nouns are formed by the addition of the third person pronouns *avën* 'he', *ava* 'she', *ayṅga/avu* 'they' and *adï* 'it' to the tense suffixes and the negative form suffix *-at-*. These nouns are named as *conjugated nouns* (Lazarus, 1878: 146) or *verbal nouns* (Rhenius, 1888 :xxxii3) by various scholars.

egs.	*o:dïn-aven*	he who read
	o:ḍi-ava > *o:ḍiyava*	she who ran (S.30)
	ëḍït-ayṅga / *ëḍït-avu*	they who took
	band-adï	it which came
	pa:ḍuv-avën	he who sings
	o:duv-ava	she who reads
	bapp-ayṅga / *bapp-avu*	they who came
	nipp-adï	it which will stand
	naḍakat-avën	he who does not walk
	tiṅgat-ava	she who does not eat
	ma:ḍat-ayṅga / *ma:ḍat-avu*	they who do not do
	o:ḍat-adï	it which does not run

All the above participial nouns distinguish gender number and case but they do not distinguish person. For instance,

1.	*na:nï o:dïn-avën*	it is who I read
2.	*ni:nï o:dïn-avën*	it is who you read
3.	*avën o:dïn-avën*	he who read
1.b.	*na:nï o:dïn-ava*	it is who I read
2.b.	*ni:nï o:dïn-ava*	it is who you read
3.b.	*ava o:dïn–ava*	she who read
1.c.	*naṅga o:dïn-ayṅga*	it is who we read
2.c.	*niṅga o:dïn-ayṅga*	it is who you (pl.) read
3.c.	*ayṅga o:dïn–ayṅga*	they who read

Here the person denoted by the participial nouns *o:dïnaven*, *o:dïnava* and *o:dïnayṅga* is performed by its subject. Like wise an action, denoted by the participial noun of the neuter gender is performed by its subject.

The declaration for participial nouns for cases is similar to that of the personal pronouns, which form part of them.

egs.	*no:ṭïnavën-a*	him (Acc.) who saw
	tindava-kï	her (Dat.) who ate
	bandayṅga-ḍa	them (Gen.) who came
	o:ḍïnadï-lï	it (Loc.) which ran
	etc.,	

The negative participial nouns are void of tense distinctions, and actions, which they denote, may correlate with any tense. In other respects the use of negative participial nouns does not differ from that of affirmative participial nouns (Andronov, 1969:213).

In addition to the participial nouns of the above type there is another kind of participial nouns, formed by adding the suffix *-iyë* to the past tense marker (except *-n-*) and negative marker *-at-*, found in Kodagu.

egs.	*band-iyë*	it is someone who came
	barat-iyë	it is someone who did not come

Though these participial nouns seem to be same as the other type they are having a basic difference by showing that this type does not distinguish gender, number and case whereas the other type distinguishes gender, number and case Consider the following examples.

(1)	*na:nï po.yë* (<*po:-i-iyë*)	it is who I went (S.31)
(2)	*ni:m po:yë*	it is who you went
(3)	*avën po:yë*	it is who he went
(4)	*ava po:yë*	it is who she went
(5)	*adï po:yë*	it which went

It is clear from the above that the suffix *-iyë* is used for singular genderless participial nouns in Kodagu.

2.9. DERIVED NOUNS

Only the nouns derived from verbs are treated here. Various processes of derivation and several suffixes are employed in the formation of nouns from verbs. The derivation of nouns from verbs is very extensive and it is also complicated in Kodagu.

There are two types of noun forms formed from verbs in Kodagu. Though both of them are capable of taking case

markers, they differ in taking modifiers. One type of nouns take only verb modifiers like subject, verbal participle, adverbs etc., whereas the other type of nouns take only the nominal modifiers like adjectives, relative participles. intensifiers etc. Therefore it is necessary to classify the nouns formed from verbs into two viz., (1) *Verbal nouns* and (2) *Derivative nouns.*

Mention has also to be made that while the formation of verbal nouns is very productive without any exception, the formation of derivative nouns is not as productive as the former. Like tense, negative, infinitive and other verb inflections, verbal noun also seems to be a verb inflection. That is, the formation of verbal noun is basically a grammatical process whereas the formation of derivative nouns is basically a process of word formation or lexical process (Kamaleswaran, 1974:11). In this respect the verbal noun can be taken as conjugated noun or participial noun. Similarly, in sentence, verbal noun has all the verb qualities in addition to its being used as a noun. Therefore, a verbal noun is only partially a noun whereas a derivative noun is totally a noun (Kamaleswaran, 1974:1). Due to this basic difference derivative noun is not found for every verb and even if an occasion arises,we do not know how a verb will form its derivative noun. As the formation of the derivative noun is basically a lexical process, it has no regular rules and we have to set up many markers.

2.9.1. VERBAL NOUNS

As already noted, the formation of verbal nouns is very productive as well as a simple process. There are very few suffixes viz, *-pë* / *-vë*, *-alï* and *-adï* which are used to derive verbal nouns in Kodagu.

2.9.1.1. The suffiixes *-pë* and *-vë* occur after the verbal stem and they are morphologically conditioned, that *-pë* occurs after the stems ending with *-x* and *-vë* occurs elsewhere.

egs.	*bax-pë* > *bappë*	coming	(S. 1 & 21)
	nadax-pë > *nadapë*	walking	(S. 1)
	birix-pë > *biripë*	dispersing	(S. 1)
	ënn-vë > *ënnuvë*	saying	(S. 34)
	poyy-vë > *poyyo*	raining	(S. 34 & 35)
	ba:l-vë > *ba:lo*	living	(S. 34 & 35)
	ma:d-vë > *ma:do*	doing	(S. 34 & 35)
	koyy-vë > *koyyo*	harvest	(S. 34 & 35)

2.9.1.2. Another productive suffix used for deriving verbal nouns is *-alï* but it is occasionally found in Kodagu.

egs.	*bax-alï* > *bakkalï*	coming	(S. 2 & 21)
	bar-alï	-id-	
	tar-alï	giving	
	ma:d-alï	doing	
	pa:d-alï	singing	
	etc.		

2.9.1.3. A third suffix used for deriving verbal noun in Kodagu, is *-adï* but this is different from other verbal nouns, formed by the addition of other suffixes because the suffix *-adï* is added directly with tense-mode and negative-mode stems.

egs.	*bapp-adï*	coming
	band-adï	-id-
	barat-adï	not coming

It is worth mentioning that the verbal noun formed by the suffix *-adi* is equivalent to the neuter participial noun in Kodagu. But it is not always clear when these forms in *-adï* are participial nouns or verbal nouns. When they denote the action of the verb only they may be taken as verbal nouns, but when they denote something which does the action of the verb they may be taken as participial nouns (Arden, 1891:227).

Consider the following examples,

1. *alli o:duvadï kaṣṭa*
   It is very difficult to read there
2. *alli o:duvadï da:rï?*
   Who is reading there?

o:duvadï in the first example is a verbal noun and *o:duvadï* in the second example is a participial noun.

2.9.2. DERIVATIVE NOUNS

As already noted, the derivative nouns are formed by the addition of many suffixes. For instance, there are many nouns like *po:kï* 'way of going/habit', *ba:ke* 'life', *no:ṭï* 'look' etc., are formed by the addition of *-kï*, *-ke* and ϕ to the verbs *po:-* 'to go', *ba:ḷ-* 'to live' and *no:ṭ-* 'to see' respectively in Kodagu. These suffixes are called derivative suffixes. It is very interesting to note that there are different suffixes, which are usually added with the same verb for forming different nouns. For example,

1. *pa:ṭa*
   (<*pa:ḍ-ta*) lesson (S. 6 & 9)
2. *pa:ṭï*
   (<*pa:ḍ-tï*) song („)

Here the suffixes *-ta* and *-tï* are added with the verb *pa:ḍ-* 'to sing'. It clearly shows the flexible nature of the derivation found between the suffixes and the verb. However in Kodagu the derivative suffixes can be classified into two viz., (1) zero suffix and (2) other suffixes.

2.9.2.1. *Zero* suffix

In most of the Dravidian languages, verbs use zero suffix as a productive marker for noun formation. It is one of the common suffixes in Kodagu. More than five hundred verbs are found with this suffix. Since the zero suffix does not occur with all verbal stems it can be said that there are some notable restrictions. In Kodogu, verbs are mainly classified into three conjugations on the basis of past tense markers they take Again these three conjugations are classified on the basis of transitivity and intransitivity contrast. In addition to the transitive formed by the addition of the derivative suffixes (i.e., transitive markers) to the inherent intransitive verbs (i.e. intransitive-2).

The number of nouns formed by zero suffix are listed here according to the conjugations.

		Total	No. of zero modification
Conjugation-1			
S.1.1.	Transitive verbs	179	157
S.1.2.1.	Intransitive-1	137	130
S.1.2.2.	Intransitive-2	98	83

Conjugation–2

S.2.1.	Transitive verbs	106	41
S.2.2.1.	Intransitive–1	74	33
S.2.2.2.	Intransitive–2	18	7

Conjugation–3

S.3.1.	Transitive verbs	34	12
S.3.2.1.	Intransitive–1	56	26
S.3.2.0.	Intransitive–2	119	46

Here it may be noted that when the zero suffix is added to the verbal stem for forming nouns there are four types of modifications taking place in the stem.

2.9.2.1.1. Zero modification

egs.	*kari*	digestion
	tiri	turning
	murï	tightness
	etc.	

2.9.2.1.2. Loss of final *–x*

egs.	*aḍix- >aḍi*	blow	(S.1)
	kaḍix- >kaḍi	bite	(,,)
	kerïx- >kerï	prevention	(,,)
	etc.		

2.9.2.1.3. Addition of enunciative vowel in the final position.

egs.	*aṭṭ-*	*aṭṭï*	chase	(S.28)
	arïp-	*arïpï*	information	(,,)

a ṭ-	*a:ṭī*	dance	(S.28)
urp-	*urpi*	blowing (with mouth)	(„)
o:ṭ-	*o:ṭī*	run	(„)
ëḷak	*ëḷakī*	uprooting	(„)
ci:p-	*ci:pī*	suck	(„)
tirīk-	*tirīkī*	screw	(„)
no:ṭ-	*no:ṭi*	look	(„)
etc.			

2.9.2.1.4. Lengthening of vowels and consonants

There are four noun forms viz., *u·ṇi* 'meals', *kė:ḍī* 'ruin, evil', *cu:ḍī* 'heat', and *po:rī* 'war' found due to the lengthening of vowels and three nouns viz., *oppī* 'agreement', *eppï* 'awaking' and *kaṇṇī*, found due to the lengthening of consonants in the stems. The short vowels in the stems viz; *uṇ-* 'to eat' *kėḍ-* 'to spoil', *cuḍ-* 'to boil' and *por-* 'to fight' and the single consonants in the roots viz., *kaṇ-* 'to see',*op-* 'to agree' and *ėp-* 'to wake up' are becoming long. And also the enunciative vowel-*i* is added with these forms.

egs.	*u:ṇ-*	>*u:ṇi*	meals	(S.28)
	kë:ḍ-	>*kė:ḍī*	evil, ruin	(„)
	cu:ḍ-	>*cu:ḍī*	heat	(„)
	po:r-	>*po:ri*	war	(„)
	opp-	>*oppï*	agreement	(„)
	ëpp-	>*ëppï*	awaking	(„)
	kaṇṇ-	>*kaṇṇï*	eye	(„)

In addition to these forms it is to be noted that the noun forms *ti:ni* 'food' *na:ṭi* 'seedlings' can also be derived

by the lengthening of the vowels in the root and the addition of derivative suffixes *-i* and *-ti* respectively.

egs.	*tin-*	to eat
	ti:n-i	food
	naḍ-	to plant
	na:ḍ-ti > *na:ṭi*	seedlings (S· 6 & 9)

2.9.2.2. Other suffixes

In Kodagu many verbal derivative suffixes like *-a -avï*, *-a:ṭa*, *-a:me*, *-pï*. *-kï* etc., are added to the verbal stems for deriving nouns. As already noted these suffixes cannot be added with all verbal stems. So it is to be said that they are in restricted distribution. When these suffixes are added to the stems some morphophonemic changes are taking place.

2.9.2.2.1. *-a* occurs only after the following stems.

egs.	*a:ṭ-a*	dance, action
	ka:c-a	heat
	ku:ṭ-a	crowd
	na:t-a	bad smell
	ni:ṭ-a	length

2.9.2.2.2. *-avï* occurs only after the stems *tar-* 'to give' and *bar-* 'to come'.

egs.	*tar-avï*	giving
	bar-avï	income

2.9.2.2.3. *-a:ṭa* is added with almost all stems as shown in the following examples.

egs.	*o:ṭ-a:ṭa*	the action of driving
	o:ḍ-a:ṭa	the action of running

tumm-a:ṭa	sneezing
naḍax-a:ṭa >*naḍaka:ṭa*	walking (S. 2)
naḍat-a:ṭa	celebrating
pu:x-a:ṭa >*pu:ka:ṭa*	burrying (S. 2)

The nouns derived by adding the derivative marker *-a:ṭa* show the result of action. The suffix *-a:ṭa* can also be related to the derived noun *a:ṭa* 'dance, action'.

2.9.2.2.4. *-a:me* occurs only after the stems *ux-* 'to plough' and *ox-* 'to agree'.

egs.	*ux-a:me* >*ukka:me*	agriculture (S. 2 & 21)
	ox-a:me >*okka:me*	agreement („)

2.9.2.2.5. *-i* occurs only after the modified stem of *tin-* 'to eat'.

eg.	*ti:n-i*	food

2.9.2.2.6. *-ike* occurs after the stem *namb-* 'to trust'

eg.	*namb-ike*	belief

2.9.2.2.7. *-e* occurs only after the following stems.

egs.	*ci:p-e*	broom
	naḍ-e	transplantation
	pu:j-e	the act of worship

2.9.2.2.8. *-ïge* occurs only after the stem *per-* 'to give birth'

eg.	*per-ïge*	birth

2.9.2.2.9. *-ke* occurs only after the stem *ba:ḷ-* 'to live'

ba:ḷ-ke >*ba:ke* life (S.8)

2.9.2.2.10. *-kï* occurs only after the following stems.

egs. *orï-kï* sleeping
po:-kï going, character

2.9.2.2.11. *-ti* occurs only after the modified root of *naḍ-* 'to plant'.

eg. *na:ḍ-ti* >*na:ṭi* seedlings (S. 6 & 9)

2.9.2.2.12. *-tï* occurs after the stems *ëḷïd-* 'to write' and *pa:ḍ-* 'to sing'.

egs. *ëḷïd-tï* >*ëḷïti* script (S. 37)
pa:ḍ-ti >*pa:ṭï* song (S.6 & 9)

2.9.2.2.13. *-ta* occurs only after the the following stem.

eg. *pa:ḍ-ta* >*pa:ṭa* lesson (S. 6 & 9)

2 9.2.2.14. *-pe* occurs after the following stems.

egs. *arix-pe* >*aripe* seive (S. 1)
kuḍix-pe
>*kkuḍipe* drinks (,,)
pode-pe bed-spread

2.9.2.2.15. *-pi* occurs after the stems ending with *-x*

egs. *ox-pï* >*oppï* agreement (S. 1 & 21)
ï:x-pï >*ï:pï* dragging (S. 1)
nilx-pï >*nippï* standing (S. 1,5 & 21)
bax-pï >*bappï* coming (S. 1 & 21)
etc.

2.9.2.2.16. *-rï* occurs only after the stem *kuḷïx* 'to become chill'

eg. *kuḷïx-rï* >*kuḷïrï* chillness (S. 1)

2.9.2.2.17. *-vï* occurs after the vowel ending stems and *-y* ending stems

egs.	*aḍa-vï* >*aḍevï*	stopping the gap	(S. 24)
	ari-vï	knowledge	
	a:y-vï	choosing	
	u'y-vï	spiting	
	ca:-vï	death	
	kaḍe-vï	grinding (with stone)	
	tïrï-vï	turning	
	etc.		

2.10. STEM ALTERNANTS

In some instances more than one stem is being used for a single verbal theme in Kodagu. Those verbs, which have more than one alternant are described in this section. There are twenty one verbs are found with more than one alternant. All those verbs can be grouped into two.

2.10.1. Those alternants which are used for verbal form and noun form are grouped under first type. There are six verbs with two alternants, of which one is used for deriving verbal forms and the another is used for deriving nominal forms (i.e., derivative nouns).

For verbal form		For nominal form	
1. *uṇx-*	to eat	*u:ṇ-*	meals
2. *këḍ-*	to spoil	*kë:ḍ-*	evil, ruin

3.	*cuḍ-*	to boil	*cu:ḍ-*	heat
4.	*tinx-*	to eat	*ti:n-*	food
5.	*naḍ-*	to plant	*na:ḍ-*	seedlings
6.	*porx-*	to fight	*po:r-*	war

Here it is clear that the lengthening of the vowels of verbal stem is the cause for nominal root (§ 2.9.2.1.4).

2.10.2. The remaining verbs are grouped under the second type since all alternants of these verbs have been used for verbal construction. Again this type can be sub-classified into two on the basis of having three-alternant verbs and two-alternant verbs.

2.10.2.1. Only six verbs are found with three alternants in Kodagu.

2.10.2.1.1. 'become', 'happen'

The alternant forms of this verb are *a:-*, *a:g-* and *a:x-*; of which *a:-* occurs before the past tense markers *-i* and *-n*, the hortative marker *-aḍï* and the auxiliary verb *-aṇḍ-*; *a:g-* occurs only before the negative markers *-a* and *-at* and *a:x-* occurs before the aorist future *-u* and the non-past marker *-p-*

egs.	*a:-i-yë >a:yë*	I became (S. 31)
	a:-n-ë	that which happened
	a:-aḍï >a:ḍï	let it happens (S. 39)
	a:-aṇḍ-a	
	>a:ṇḍa	(it) should not happen (,,)
	a:g-a	that will not happen
	a:g-at-e	without having happened

a:x-u >a:ku	(that) may happen (S. 2)
a:x-p-a >a:pa	that happens (S. 1)

2.10.2.1.2. 'go'

The alternant forms are *po:-*, *po:g-* and *po:x-*. *po:-* occurs in the imperative construction and before the past tense markers *-i* and *-n-*, the hortative marker *-aḍï* and the auxiliary verb *-aṇḍ-*; *po:g-* occurs before the negative suffixes *-at-* and *-a-* and *po:x-* occurs in the remaining verbal constructions.

egs.	*po:*	go (imp. sg.)
	po·iri >po·ri	go (imp. pl.) (S. 31)
	po:i-ye >po:yë	I who went (S.31)
	po:-n-ë	I went
	po:-aḍï >po:ḍï	let some one goes (S. 39)
	po:-aṇḍu >po:ṇḍu	(some one) must go (S. 39)
	po:g-a	(some one) will not go
	po:g-at-ë	that which is not going
	po:x-u >po:ku	(some one) may go (S.2)
	po:x-p-i >po:pi	I will go (S.1)
	etc.	

2.10.2.1.3. 'give'

The alternants of this verb are *ta:-*, *tar-* and *tax-* of which *ta:-* occurs only in the imperative construction; *tar-* occurs before the derivative suffix *-avi* and in free variation with *tax-* when it occurs with the negative markers *-a* and *-at-* the hortative marker *-aḍï* and the auxiliary verb *-aṇḍ-* and *tax-* occurs also in the other verbal constructions.

egs.	*ta:*	give (imp. sg.)
	ta:-iri >*ta:ri*	give (imp. pl.) (S. 31)
	tar-avï	action of giving
	tar-a	(some one) will not give
	tar-at-e	don't give (neg-imp. sg.)
	tar-aḍï	let some one give
	tor-aṇḍ-a	(some one) should not give
	tax-a >*takka*	(") will not give (S. 1 & 21)
	tax-u >*takku*	(") may give (,,)
	tax-aḍi >*takkaḍï*	let (some one) (,,)
	tax-ate >*takkate*	don't give (neg-imp. sg.) (S. 1 & 21)
	tax-aṇḍu >*takkaṇḍu*	(some one) must give (S. 1 & 21)
	tax-p-i >*tappi*	I will give (,,)
	tax-nd-ëtï >*ta:tï*	we gave (S. 1 & 3)

2.10.2.1.4. 'come'

The alternants are *ba:-*, *bar-* and *bax-*. The distribution of each alternant is same as the alternants of the verb 'give' (§ 2.10.2.1.3.)

ba:	come (imp. sg.)
ba:-iri >*ba:ri*	come (imp pl.) (S. 31)
bar-avi	income
bar-a	(some one) will not come
bar-at-e	don't come (neg-imp. sg)

bar-aḍï	let some one come
bar-aṇḍ-a	(some one) should not come
bax-a >bakka	(") will not come (S. 1 & 21)
bax-u >bakku	(") may come (,,)
bax-aḍï >bakkaḍï	let (some one) come
bax-ate >bakkate	don't come (neg. imp-sg.) (S. 1 & 21)
bax-aṇḍ-u >bakkaṇḍu	(some one) must come (S. 1 & 21)
bax-p-i >bappi	I will give (S 1 & 21)
bax-nd-ëṭi >ba:ṭi	we came (S. 1 & 3)

2.10.2.1.5. 'spin'

The alternants of this verb are *ne:y-*, *nejj-* and *neyy-*. *ne:y-* occurs only in the imperative construction; *nejj-* occurs only before the past tense marker *-t-* and *neyy-* occurs in other verbal constructions.

egs.	*ne:y*	spin (imp. sg.)
	ne:y-iri	spin (imp. pl)
	nejj-t–ë >nejjë	I spin (S. 36)
	neyy-vi >neyyuvi	I will spin (S. 34)
	neyy-aṇḍu	(some one) must spin
	neyy-alu	(") may spin
	neyy-a	(") will not spin

2.10.2.1.6. 'get up'

ëd-, *ėx-* and *ë:-* are the alternants, of which *ëd-* occurs only before the past tense marker *-nd-*, *ëx-* occurs before the transitive marker *-p-* and *ë:-* occurs in other verbal constructions.

egs.	*ed-nd-e* >*ėddë*	I got up (S 45)
	ëx-p- >*eppi*	make to get up (imp.sg.) (S.1)
	ë:	get up (imp. sg)
	ė-v-a	we will get up
	e:-aṇḍ-u >*ë:vaṇḍu*	(some one) must get up (S.39)

2.10.2.2 There are nine verbs found with two alternants for verbal construction in Kodagu.

2.10.2.2.1 'see'

kaṇ- and *ka:ṇx-* are the alternants for this verb. *kaṇ-* occurs only before past tense marker *-t-* and the zero derivative suffix. *ka:ṇx-* occurs elsewhere.

egs.	*kaṇ-t-ė* >*kaṇḍë*	I saw (S.6 & 22)
	kaṇ-ϕ >*kaṇṇï*	eye (S.21 & 28)
	ka:ṇx-a *ka.ṅga*	let us see (S.2,22 & 23)
	ka:ṇx-p-i >*ka:mbi*	I will see (S.2,22 & 23)
	ka:ṇx-u >*kaṅgu*	(some one) may see (,,)

2.10.2.2.2. 'copulate'

'The alternants are *o:ḷ-* and *o:x-*. *o:ḷ-* occurs only in the positive imperative construction and *o:x-* occurs in other verbal constructions.

egs.	*o:l- >o:ḷï*	copulate (imp. sg.)
	o:l-iri	,, (imp. pl.)
	o:x-p-i >o:pi	I will intercourse with (S. 1)
	o·x-u >o:ku	(some one) will intercourse with (S.2)

2.10 2.2.3. 'plough'

u:- and *ux-* are the alternants of which *u:-* occurs only in positive imperative construction and *ux-* occurs elsewhere.

egs.	*u:*	plough (imp. sg.)
	u:-iri >u:yiri	plough (imp.pl) (S.30)
	ux-t-ė >utte	I ploughed (S.1 & 21)
	ux-p-i uppi	I will plough (,,)
	ux-at-e >ukkate	don't plough (neg. sg) (S. 2&21

2.10.2.2.4. 'live'

bad- and *ba:ḷ-* are the alternant forms for this verb) *bad-* occurs only before the past tense marker *-nd-* and *ba:ḷ-* occurs elsewhere.

egs.	*bad-nd-ė*	
	>baddë	I lived (S.38)
	ba:ḷ- >ba:ḷï	live (imp. sg.) (S. 28)
	ba:ḷ-ke >ba:ke	life (S. 8)
	ba:ḷ-v-a	
	>ba:ḷuva	he will live (S. 34)

2.10.2.2.5. 'fall'

The alternants *bud-* and *bu:ḷ-* of this verb are having same distribution as in § 2.10.2.2 4.

egs. *bud-nd-ë*
>buddë I fell (S.38)
bu:ḷ- >bu:ḷï fall (imp. sg.) (S.28)
bu:ḷ-v-a >bu.va he will fall (S.8)

It may be noted that *bud-* and *bu:ḷ* are in free variation when they are followed by the suffix beginning with the consonant *-v-*.

egs. *bud-v-a*
>buvva it will fall (S. 45)
bud-vë >buvvë falling
bu.ḷ-v-a >bu:va it will fall (S.8)
bu:ḷ-vë >bu:vè falling. (,,)

2.10.2.2.6 'drag'

ï:-and *ï:x*-are the alternant forms *ï:*– occurs only in the positive imperative construction and *ï:x*– occurs elsewhere.

egs. *ï:* drag (imp. sg.)
ï:-iri >ï·yiri drag (imp. pl.) (S.30)
ï:x-u >ï:ku (some one) may drag (S.2)
ï:x-t-è >ï:të I dragged (S.1.)
ï:x-p·i >ï:pi i will drag (S. 1)
ï:x-ate >ï:kate don't drag (neg. imp. sg.) (S .2)

2.10.2.2.7. 'be'

The alternant forms for this verb are *ir*– and *ix*–. *ir*– occurs in the imperative construction and it is free variation with *ix*– when it is followed by

the negative marker *-a-* and *-at-*, and the hortative marker *-aḍī-* and the auxiliary verb *-aṇḍ-*. *ix-* occurs also in other verbal constructions.

egs.	*ir- >irï*	be (there) (imp. sg·) (S. 28)
	ir-iri	be (there) (imp. pl).
	ir-ate	don't be there (neg. imp. sg.)
	ir-aḍï	let it be
	ir-aṇḍu	(some one) must be
	ix-ate >ikkate	don't be (neg-imp. sg.) (S. 2. & 21)
	ix-aḍi >ikkaḍï	let it be (,,)
	ix-aṇḍu >ikkaṇḍu	(some one) must be (,,)
	ix-p-i >ippi	I will be (,,)
	ix-nd-ëtï >iñjëtï	he was (S. 1 & 17)

2.10.2.2.8 'do'

kejj- and *keyy-* are found as alternant forms for this verb, of which *kejj-* occurs only before the past tense marker *-t-* and *keyy-* occurs elsewhere.

egs.	*kejj-t-ë >kejjë*	I did (S. 36)
	keyy- >keeyï	do (imp. sg.) (S. 28)
	keyy-iri	do (imp. pl.)
	keyy-ate	don't do (neg. imp. sg.)
	keyy-aṇḍu	(some one) must do
	keyy-v-a >keyyuva	he will do (S.34)

2.10.2.2.9. 'win'

The alternant forms are *gejj-* and *gell-*and these have the same distribution as in 2.10.2.2.8.

egs.	*gejj-t-ė*	
	>gejjë	I won (S. 39)
	gell->gellï	win (imp. sg.) (S. 28)
	gell-iri	win (imp. pl.)
	gell-a	(some one) will not win
	gell-ate	don't win (neg. imp. sg.)
	gell-u	(some one) may win
	gell-v-a	
	>gelluva	he will win (S. 34)

3. ADJECTIVES

3.0. Adjectives are a class of words, primarily identifiable by their function as attribute to the following nouns. There are some monomorphemic words and some derived words which are used as adjectives in Kodogu language. It is to be noted that the verbal forms like adjectival participle and some nouns are also used as adjectives in this language. Therefore the adjectival expressions may be said to be formed from adjectives which may be monomorphemic or derived, nouns and verbal participle.

3 1 Adjectives are morphologically classified into two types viz., simple and derived.

3.1.1. Simple adjectives

These can also be sub-divided into descriptive, non-descriptive and bound adjectives.

3.1.1.1. Descriptive adjectives

ane:ka	many
antï	whole, complete
ambïli	small quantity
aynï	true
arme	rare
e:ka	whole, full
oḷḷï	full
oṇe	dried
otte	single
o:re	slant
ïḍi	complete
ëḷe	young
ë:ra	much
kacci	small
kaḍe	last
kaḷi	grown
kïrï	small
kïrkë	small
caṇṇa	broken, small
ciṇṇi	small
ci:yë	good

cennë	a little
cerï	small
tu:pe	light (not heavy)
tëḷḷë	thin
dumba	many
doḍḍë	big
na:na:	various
nityë	daily
nucci	broken, small
panni	drizzling
pala	many
paḷë	old
pittiyë	next
pi:ce	small
puṅga	slight
puccï	slow, small
puñje	silly
puttïḷi	beautiful
puḷi	good-old
pu:ra	whole
pu:rti	complete
pu:ḷa	good-old
perï	big
pertë	much
porï	small
poḷḷe	empty

po:li	untruth
prati	every
baṇṇe	bald, empty
bahu	very
ba:ri	much
bo:re	another
maṅgï	very old/aged
ma:	big
mukkiye	important
moṇṇe	rough
moda	first
vyarta	useless
sakala	all

3.1.1.2. Non-descriptive adjectives include only the demonstrative and interrogative adjectives.

egs.	*a:*	that
	i:	this
	e:	which

3.1.1.3. Bound adjectives

There are two types of bound adjectives in Kodagu, viz. numeral adjectives and other adjectives.

(a) Numeral adjectives

The numeral one to three have bound variants involved in compouuds.

egs. *o:r-a:ṇḍï* one year

i·r–a:ṇḍï	two years
mu–ka:li	
>*mukkali*	three legged stool (S. 55)
mu:-a:ṇḍï	
>*mu.va:ṇḍï*	three years (S. 68)

Other numerals four to seven can also occur as bound adjectives to the epicene plural *-var*

egs	*na.l-var*	
	>*na:va*	four persons (S. 5 & 16)
	ay–var	
	>*ayva*	five persons (S.16)
	aru-var	
	>*aruva*	six persons
	e:ḷï–var	
	>*e va*	seven persons

(b) Other adjectives consist of forms having restricted occurrences with certain heads.

egs.	*kem–maṇṇï*	red soil
	cem–puke	
	>*cembuke*	a bird (S 52)
	pon–paḍi	
	>*pombaḍi*	golden door (S .52 & 53)
	karïm–pa:mbï	
	>*karïmba:mbï*	black snake (S. 52)
	perïm–te:nï	
	>*perïnde:nï*	big-bee honey (S . 52 & 53)
	perïm–ka:ṭi	
	>*pegga:ṭi*	big bison (S. 52, 54 & 55)
	perïm–puli	
	>*pebbuli*	big tiger (S 52, 54 & 55)

3.1.2 Derived adjectives

All derived adjectives consisting of a single root plus one of the adjectivalizers belong to this class. The root may belong to one of the following i e., demonstrative and interrogative bases, adverbs, appellatives and nouns.

3.1.2.1. Adjectives derived from demonstrative and interrogative bases have *-cë*, *-ntë*, *-natë*, *-në* and *-tara* as adjectivalizers.

3.1.2.1 1. *-cė*

egs.	*a-cė >accë*	that much of (S.21)
	i-cë >iccė	this much of (,,)
	e-cë >eccė	how much of (,,)

3.1.2.1.2. *-nte*

egs.	*a-ntë*	that kind of
	i-ntë	this kind of
	e-ntė	what kind of

3.1.2.1.3. *-natė*

egs.	*a-natë >annatë*	that way of (S.21)
	i-nate >innatë	this way of (,,)
	e-natë >ennatë	what way of (,,)

3.1.2.1.4. *-nė*

egi.	*a-né >annë*	that type of (S.21)
	i-në >innë	this type of (,,)
	e-në >ennë	which type of (,,)

3.1.2 1.5. *-tara*

egs.	*a:-tara*	that kind of
	i:-tara	this kind of
	e:-tara	what kind of

3.1.2.2. Adjectives derived from adverbs have *-të* as an adjectivalizer.

3.1.2.2.1. *-të*

egs.	*akka-te*	of that time
	ikka-të	of this time
	ekka-të	of which time
	andi-të- >ande·të	of that day (.S47)
	indi-të >inde:të	of this day (S 47)
	endï-të >ende:të	of which day or time (S.47)

3.1.2.3 Adjectives derived from appellative verbs have *-ë* as adjectivalizer.

3.1.2.3.1. *-ë*

egs.	*ëli-ë >ẹliyë*	poor (S.30)
	ẹle-ë >ẹ̈leyë	young (S 30)
	cerï-ë >ceriyë	small (S. 26 & 30)
	nal-ë >nallë	good . (S.21)
	paḷë >paḷëyë	old (S. 30)
	pudï-ë >pudiyë	new (26 & 30)
	perï-ë >periye	big (,,)
	balli-ë >balliyë	strong (S. 30)

3.1.2.4. Adjectives derived from nouns belong to this group. Here the suffixes *-tï*, *-të*, *-ë* and *-kara* are used as adjectivalizers.

3.1.2.4.1. *-tï*

egs.	*eḍa-tï*	left
	bala-tï	right

3.1 2.4.2. *-te*

eg.	*paṇḍï-të*	
	>*paṇḍe:të*	old (S. 47)

3.1.2.4.3. *-ë*

egs.	*uddï-ë* >*uddiyë*	high (S. 26 & 30)
	kaḍe-ï >*kaḍeyë*	last (S. 30)
	kë:kï-ë >*kë:kiyë*	eastern (S. 26 & 30)
	tekkï-ë	
	>*tekkiyë*	southern (,,)
	paṇḍi-ë	
	>*paṇḍiyë*	old (,,)
	baḍakï-ë	
	>*baḍakiyë*	northern (,,)
	me:kï-ë	
	>*me:kiyë*	western (,,)

3.1.2.4.4. *-kara*

egs.	*apa:ya-kara*	dangerous
	vesana-kara	sorrowfull

3.2. NOUNS USED AS ADJECTIVES

There are some nouns, simple as well as derived, used as adjectives.

		Adjective	Noun
egs.	*oḍaki*	broken	breaching
	kaṭṭi	thick	thickness
	kaḍi	biting	bite
	kuññi	small	child
	tale	first	head
	naḍu	central	centre
	nari	too much	tiger
	ni:la	blue	blue colour
	pacce	green	green colour
	pratamu	important	importance
	mañje	yellow	yellow colour
	etc.,		

3.3. VERBAL FORMS USED AS ADJECTIVES

Relative participles, being verbal forms are used as adjectives.

egs.	*co:ndė pu:*	red flower
	bappė ka:la	future year (time)
	baddė ba:ke	lived life
	etc.,	

4. ADVERBS

4.0. Adverbs are a class of words which are identified by their functions as attributes to verbs. Morphologically Kodagu adverbs are classified into three viz.,

1. Simple adverbs,
2. Derived adverbs and
3. Compound adverbs.

Each of these are again classified on the basis of semantics as time, place, manner and quantity adverbs.

4.1. SIMPLE ADVERBS

Those stems which are monomorphemic belong to this class.

4.1.1. Time adverbs

egs.	*a:ra:ra*	again and again
	iñña	still
	iññu	till
	ommake	at once
	kaḍe:la	in the end, at last
	kaḍïṅgane	suddenly
	na:ḷe	to morrow
	ninna:ndï	yesterday
	ne:rate	before
	piñña (l)	after
	pittiyandï	next day
	piniya:ndï	a day after tomorrow
	balïṅgane	suddenly
	boggane	-id-
	marci	again
	miñña (l)	before
	moniya:ndï	a day before yesterday
	sada:	always
	sira	a long time
	etc.,	

4.1.2. Place or locative adverbs

egs.	*attaṇe*	there

oḷa	inside
oḷagï	-id-
ëḍe	in between two
ka:bara	upper side
kï:da	in the bottom
kï:bara	lower side
du:ra	at a distance
pakka	near
para	side
pa:re	out side
bayya	back side
bari	side
mi:da	in the top
muṭṭï	upto
etc.,	

4.1.3. Manner adverbs

egs.	*aḍaṅga*	fully
	aḍḍa	horizontally
	aṇṇa	wholly
	ennaṅgï	why
	ennï	what
	okkace	unitely
	oyyane	quickly
	oḷaya	truely
	kaṇḍita	certainly
	kokkare	without anything
	taṇṇane	comfortably
	nallo:ne	very nicely

ne:re	straightly
para	other
paripoḍi	separately
bo:jaṅguṇḍï	beautifully
melle	slowly
sa:te	soundly
etc.,	

4.1.4. Quantity adverbs

egs.	*irma*	twice
	umilï	little bit
	orma	once
	o:rama	-id-
	cennëṅgï	little
	ti:ra	fully
	ti:ra:	-id-
	tumba/dumba	too much
	pertï/pe:rtï	-ib-
	va:re	a little
	suma:rï	approximately
	heccige	too much
	etc.,	

4.2. DERIVED ADVERBS

Derived adverbs consist of a single root followed by one or more derivative suffixes. The roots may be demonstrative and interrogative bases, adverbs, adjectives or nouns. Since most of the derivative suffixes are not identified,t hey are grouped under adverbalizers. Some adverbs

are derived by adding the case suffixes *-lï* (locative) and *-kï* (dative) to the noun stems.

4.2.1. Time adverbs

4.2.1.1. Adverbs derived from demonstrative and interrogative bases have three adverbalizers, viz., *-kal*, *-ndï* and *kaṇe.*

4.2.1.1.1. *-kal*

egs.	*a-kal* >*akka*	then (S. 5 & 21)
	i-kal >*ikka*	now („)
	e-kal >*ekka*	when („)

4.2.1.1.2. *-ndï*

egs.	*a-ndï*	that day
	i-ndï	this day
	e-ndï	which day

4.2.1.1.3 *-kaṇe*

egs.	*a-kaṇe* >*akkaṇe*	then (S. 5 & 21)
	i-kaṇe >*ikkaṇe*	now („)
	e-kaṇe >*ekkaṇe*	when („)
	a:kaṇe	upto the time that
	i:kaṇe	upto the time this
	e:kaṇe	upto the time which

4.2.1.2. Adverbs derived from another adverb have five adverbalizers viz., *-ka*, *-ke*, *kï*, *-lu* and *-a:kaṇe*

4.2.1.2.1 *-ka*

eg.	*akka-ka*	always

4.2.1.2.2. *-ke*

egs.	*akkaṇe-ke*	at that time
	ikkaṇe-ke	at this time
	ekkaṇe-ke	at what time

4.2.1.2.3. *-kï*

egs.	*andï-ki*	
	>ande:ki	that day (S. 47)
	indï-kï	
	>inde:ki	this day (,,)
	endï-kï	
	>ende:kï	which day (,,)
	na:ḷe-kï	tomorrow

4.2.1.2.4. *-lu*

eg.	*ekka-lu*	always

4.2.1.2.5. *-a:kaṇe*

egs.	*akka-a:kaṇe*	
	>akka:kaṇe	upto that time (S. 39)
	ikka-a:kaṇe	
	>ikka:kaṇe	upto this time (,,)
	ekka-a:kaṇe	
	>ekka:kaṇe	upto what time (,,)
	andi-a:kane	
	>anda:kaṇe	upto that day (S. 27)

indī-a:kaṇe	
>inda:kaṇe	upto this day (,)
endī-a:kaṇe	
>enda:kaṇe	upto what day (,,)

4.2.2. Place adverbs

4.2.2.1. Adverbs derived from demonstrative and interrogative bases have six adverbalizers viz., *-taṭi*, *-tī*, *-para*, *-li*, *-le* and *-lī*

4.2.2.1.1. *-taṭi*

egs.	*a-taṭi >attaṭi*	to that side (S 21)
	i-taṭi >ittaṭi	to this side (,,)
	e-taṭi >ettaṭi	to which side (,,)

4.2.2.1.2. *-tī*

egs.	*a-tī >attī*	to that side (S.21)
	i-tī >ittī	to this side (,,)
	e-tī >ettī	to which side (,,)

4.2.2.1.3. *-para*

egs.	*a-para >appara*	that side (S.21)
	i-para >ippara	this side (..)
	e-para >eppara	which side (,,)

4.2.2.1.4. *-li*

egs.	*a-li >alli*	there (S.21)
	i-li >illi	here (,,)
	e-li >elli	where (,,)

4.2.2-1.5. *-le*

egs.	*a:-le*	by that way
	i:-le	by this way
	e:-le	by which way

4.2.2.1.6. *-lï*

egs.	*a:-lï*	in that
	i:-lï	in this
	e:-lï	in which

4.2.2.2. Adverbs derived from another adverb have four adverbalizers, viz., *-kï*, *-lï*, *-ñji* and *-attaṇe*.

4.2.2.2.1. *-kï*

egs.	*kï:da-kï*	in the bottom
	bayya-kï	in the back side
	mi:da-kï	in the top
	alli-kï	there
	illi-kï	here
	elli-kï	where

4.2.2.2.2. *-lï*

egs.	*kï:da-lï*	in the bottom
	mi:da-lï	in the top

4.2.2.2.3. *-ñji*

eg.	*bayya-ñji*	from back side

4.2.2.2.4. *-attaṇe*

egs.	*alliki-attaṇe*	
	>allikattaṇe	upto there (S 27)
	illiki-attaṇe	
	>illikattaṇe	upto here (,,)
	elliki-attaṇe	
	>ellikattaṇe	upto where (,,)

4.2.2.3. Adverbs derived from adjectives have *-e, -pï,-me* and *-te* as adverbalizers.

4.2.2.3.1. *-e*

egs.	*kï:ḷ-e*	under
	me:l-e	upper

4.2.2.3.2. *-pï*

eg.	*mun-pï >mumbï*	in the front (S.22 & 23)

4.2.2.3.3. *-me*

eg.	*pora-me*	in outside

4.2.2.3.4. *-te*

egs.	*eḍa-te*	in the left
	pora-te	in out-side
	bala-te	in the right

4.2.2.4. Adverbs derived from nouns have *-lï, -e* and *-tï* as used as adverbalizers.

4.2.2.4 1. *-lï*

egs.	*aḍi-lï*	in the bottom
	oḷï-lï	into the inside

4.2.2.4.2. *-e*

eg.	*naḍu-e*	
	>naḍuve	in the middle

4.2.2.4.3. *-tï*

eg.	*eḍa-t*	in that place

4.2.3. Manner adverbs

4.2.3.1. Adverbs derived from demonstrative and interrogative bases belong to this class, which have *-nane* *-ntadï*, *-taratï* and *-naṅguṇḍi* as adverbalizers.

4.2.3.1.1. *-nane*

egs.	*a-nane*	
	>annane	like that (S.21)
	i-nane	
	>innane	like this (,,)
	e-nane	
	>ennane	like what (,,)

4 2.3.1 2. *-ntadï*

egs.	*a-ntadï*	that
	i-ntadï	this
	e-ntadï	which

4.2.3.1.3. *-taratï*

egs.	*a:-taratï*	like that kind
	i:-taratï	like this kind
	e:-taratï	like what kind

4.2.3.1.4. *-naṅguṇḍï*

egs.	*a:-naṅguṇḍï*	on account of that
	i:-naṅguṇḍï	on account of that
	e:-naṅguṇḍï	on account of what

4.2.3.2. Adverbs derived from nouns have *-li* and *-te* as adverbalizers.

4.2.3.2 1 *-li*

eg.	*jo:r-lï*	speedly

4.2.3.2.2. *-te*

eg.	*ca:y-te*	beautifully

4.2.4. Quantity adverbs

4.2.4.1. Adverbs derived from demonstrative and interrogative bases have *-cëkï* as an adverbalizer.

4.2.4.1. *-cëkï*

egs.	*a-cekï*	
	>accekë	that much (S 21)
	i-cekï	
	>iccekï	this much (,,)
	e-cekï	
	>eccëkï	how much (,,)

4.3. COMPOUND ADVERBS

By partial and full reduplication of certain nouns and adverbs, there are five compound adverbs in Kodagu, of which four are used as time adverbs and one as place adverbs. The first constituent of each construction can be taken as the basic form, from which the second constituent can be derived by reduplication.

4.3.1. Time Adverbs

egs.	*iññа piññа*	from now
	iññi miññа	afterwards
	ëḍeyëḍe	at frequent intervals
	sira sira	at a long time

4.3.2. Place Adverbs

eg.	*suttu muttu*	all around

5. PARTICLES

5.0. Particles are a class of uninflected words used to indicate syntactic relationships; but unlike adjectives and adverbs. Here nominal post-positions, conjunctions, quotative, interjections and vocatives are treated as particles.

5.1. NOMINAL POST-POSITIONS

Nominal post-positions are different from adverbs since they occur only after a case inflected words such as nominative, accusative, genitive etc, to indicate its grammatical or syntactical relationship to the following words particularly verb in a sentence.

In Kodagu the nominal post-positions are grouped into three on the basis of co-occuring case inflected nouns.

5.1.1. Nominative + Post-position

o:ḷa 'upto', *bare* 'upto' *toṭṭi* 'from', *krame:ṇa* 'manner' and *maṭṭige* 'until' are used as post-positions in this class. Though *o:ḷa* and *bare* are same in meaning they are different in their function. *bare* can occur with all nouns.

egs. 1. *ni:ki edïbare po:ṇḍu*
toyou - upto which - must go
Upto which place you have to go?

2. *ni:nï kaḍalo:ḷa po:*
you - upto sea - go
You go upto the sea

3. *a: ka:latoṭṭï ma.ḍuva*
that - from time - will do (they)
They are doing from that period

4. *a: sa:ma:na: krame:ṇa na:kï bo:ṇḍu*
that - thing - manner - to me - want
I want it like that thing

5. *iven adï maṭṭige ma:ḍuva*
he - that - untill - will do (he)
He will do untill that

5.1.2. Accusative + Post-position

There are three post-positions in this class; they are *anake* 'like', *kuriñji* 'about' and *po.le* 'like'

egs. 1. *ni:nï avëna anake o:ḍï*
you - him - like - run
You run like him

2 *na:nï avëna kuriñ ji ëṇṇuvi*

I - him - about - (I) will talk

I will talk about him

3. *ava ivana po:le o:duva*

she - him - like - read

She will read like him

5.1.3. Genitive + Post-position

Four post-positions are used in this class; they are *edike* 'in front' *edirï* 'in opposite', *ku:ḍe* 'accompany', and *jotëlï* 'accompany'.

egs. 1. *ni:nï avëṇḍa edike nillï*

you - him (gen.)-front - stand

You stand in front of him

2. *ni:ni avaḍa edïrï po:te*

you - her - front - don't go

You don't go in front of her

3. *ava na:ḍa ku:ḍe bappa*

she - my - alongwith-will come

She will come along with me

4. *na:nï avvëṇḍa jotëlï ippi*

I - mother's - with - be (I)

1 will stay with mother

5.2. CONJUNCTIONS

The particles, viz., *atava* 'if not', *a:ce:ṅgi* 'but', *punaha* 'again' and *vinaha* 'except' are used as conjunctions in Kodagu.

egs. 1. *ava bappa atava ivën bappa*
she - (will) come - or - he - (will) come
She will come or this man will come

2. *ka:ḷappe ba:ti a:ce·ṅgi na:ni kanḍitülle*
Kalappa - came(he) - but - I - did not see
Mr. Kalappa came but I didn't see him

3. *aven nandi o:di punaha eḷidici*
he - well - having read-again - wrote (he)
Having read well he wrote

4. *na·ki i pustaka ella bo:ṇdu*
to me - this - book - all - need
vinaha a: pustaka
except - that - book
I need these books except that book

5 3 QUOTATIVE

The particle *endï* is used as quotative marker in Kodagu. Morphologically this is verbal participle of *en*-'say', but unlike Tamil it is not a conjugated verb in Kodagu. The using of *endï* and finite verb in a sentence convey an indirect quotation in Kodagu.

egs. 1. *avën bappa endï eṇṇici*
he - comes (he) - say so - said (he)
He said that he will come

2. *na:nɨ bappi endī eṇṇici*
   I - will come - say so - said (he)
   He said that I will come

3. *ni:kɨ po:ṇḍu endī uṇḍī*
   to you - need to go - say so - be
   It is said that you have to go

When this particle is added to any constituent they are well wanted and they behave like a single wor .

egs. *po:ṇḍu-endɨ* >*po:ṇḍu·ndī* (S 62)
bande endī >*bandë:ndɨ* (,,)
bappi-endɨ >*bappi:ndɨ* (,,)
bappa-endɨ >*bappa:ndī* (,,)
banditī-endī >*banditī:ndī* (,,)

5.4. INTERJECTIONS

In Kodagu interjections are used as simple words to express surprice, sorrow, pitty, endearment etc.

(a) Surprice

a·ha	An exclamation-expressive of wonder
o.ho	Oho! -expressing wonder or regret
enno:	What! -an exclamation of surprise

(b) Sorrow

a:	Ah! (expressing pity)
ayyo:	Alas! (,,)
uyyi	Alas!

(c) Anger

uci	degraded expression for a man
gu:va	who is that fellow!

(d) Attention

aku	yes
akula	yes indeed
ada	behold
adari	there it is
idari	-id-

(e) Endearment

lo	Hay! (in addressing a male or female)

(f) Melody

e:le:lo	An expressing of lute in song

5.5. VOCATIVE

Vocative expressions include only human nouns particularly kinship terms, personal names and certain common nouns, where the vocative is used for direct address. In Kodagu the vocative expressions are formed by the precedence of certain forms or by suffixing some sign of emphasis or certain fragments of personal pronouns, by which these can be classified into two viz., pre-vocative and pro-vocative.

5.5.1. Pre-vocative

e: is used for pre-vocative as free word before a phrase or a sentence as follows.

egs. 1. *e: mu:ḍi illikï ba:*
hallo - girl - here - come
Hallo! girl, come here

2. *e: aṇṇe i:na o:dï*
hallo- brother (elder)- this (acc.)- read
Hallo brother! read it

3. *e: avvë na:ki kodipëkï koḍï*
hallo - mother - to me - to drink - give (imp.)
Hallo mother give me (something) for drinking

5.5.2. Pro-vocative

Pro-vocatives are expressed by suffixing *-ayya* and *-e:* and by lengthening of the final vowel of the nominative.

5.5 2.1. *-ayya*

This is added only with kinship terms when they end with *-ën* but there is an exception with *mo:ven* 'son'.

egs.	*akkën-ayya*	
	>akkayya	elder sister (S.70)
	ajjën-ayya	
	>ajjayya	grand father (,,)
	aṇṇën-ayya	
	>aṇṇayya	elder brother (,,)
	appën-ayya	
	>appayya	father! (,,)
	avvën-ayya	
	>avvayya	mother (,,)
	tammaṇen-ayya	
	>tammaṇayya	younger brother (,,)

ba.vĕn–ayya		
>ba:vayya	brother–in-law	(,,)
mammen-ayya		
>mammaḷya	sister–in law	(,,)
maymen–ayya		
>maymayya	son-in-law	(,,)
ma:vĕn-ayya		
>ma:vayya	father in–law	(,,)
etc.		

5.5.2.2. *–e:*

This is added with kinship terms ending with *-ḷ* and the other human nouns ending with the epicene plural marker *–aḷ* and *mo:ven* 'son'

egs.	*mo.vaḷ–e:*	
	>mo:ḷe:	daughter (Voc.) (S.43)
	mo:vĕn–e:	
	>mo:ne:	son (Voc) (S.43)
	koḍavaḷ-e:	Kodavas (Voc.)
	makkaḷ–e:	children (Voc.)
	maymaḷ–e:	daughter–in–law (Voc.)
	etc.,	

5.5.2.3. Lengthening of the final vowel of nominative takes place invariably for all human nouns, end with vowel, particularly *–i*.

	Nominative	Vocative	
egs.	*ajji*	*ajji:*	grand-mother

maccini	*maccini:*	younger sister-in-law
mu:ḍi	*mu·ḍi:*	girl
ta:yi	*ta·yi:*	mother
de:vi	*de.vi·*	goddess
ka ve:ri	*ka:ve:ri*	mother Cauvery
pa:pi	*pa:pi:*	sinner
etc.,		

It is to be noted that in the case of personal names there are certain other vocative constructions.

(a) *avare:* is added for honorific vocative expression

egs. *so:maṇṇĕn-avare:* Somanna (Voc.)
ña:ṇayyĕn–avare: Gnanayya (Voc.)
etc.

(b) when the addressed are elderly persons *ajjĕ* and *ajji* are used for male and female names respectively.

egs. *muttaṇṇĕn–ajjĕ*
> *muttaṇṇajjĕ* Muthanna (Voc.) (S. 70)
ta:yammĕn–ajji
> *ta:yammajji* Thayamma (Voc.) (,,)

6. CLITICS

Clitics are those particles which are always bound and they do not take either case markers or tense markers. Derivational and inflectional morphemes are different from clitics since the clitics are limited in occurrence to particular classes of stems. In Kodgu these are used for many modalities like interrogative, emphasis, probability, conscession etc.

6.1. INTERROGATIVE

Any declarative clause can be converted into a question by adding *-a:* at the end of a statement in Kodagu. Even a part of the statement can be questioned when the part carries the question marker.

egs. 1. *avën manekï po:ca:*

1.a. *avën maneka: po:ci*

1.b. *avëna: manekï po:ci*

Did he go home?

When the interrogative marker is added to any constituent they will get some changes and behave like a single word.

egs. *mara-a:*
  >*mara:* is it tree? (S.39)

bandiya-a:
  >*bandiya:* did you come? (,,)

bappa-a:
  >*bappa:* would he come? (,,)

bakku-a:
  >*bakkuva:* may it come? (S.29)

puli-a:
  >*puliya:* is it tiger? (S.30)

etc.,

In addition to this interrogative marker *-a:*, *-la* and *-na* are also used to denote interrogation in a phrase. These occur only after the first person plural marker *-aṅga* and both of them are in free variation.

egs. *ma:ḍaṅga-la*
  >*ma:ḍala* Shall we do? (S 33)

maḍaṅga-na
  >*ma:ḍana* -id- (,,)

po·kaṅga-la
  >*po:kala* Shall we go? (,,)

po:kaṅga-na
  >*po:kana* -id- (,,)

etc.,

6.2. EMPHATIC

Emphasis is expressed by adding the suffix *-e:* in Kodagu. when this suffix is added with personal pronouns it gives the meaning 'self' and when it is added with other nominals it gives the meaning 'only'.

egs 1. *na:n-e: bandë*
I-Emp. - came-I
I came myself

2. *ni:n-e: ma:ḍiya*
you-Emp.- did (you)
You did yourself

3. *avaḷ-e: ba:ṭi*
she-Emp. came (she)
She came herself

4. *gaṇapati-ye: ma:ḍici*
Ganapathy-Emp. — did (he)
Ganapathy did himself.

5. *na:nï na:ḷe-ye: po:pï*
I - tomorrow-Emp. - will go (I)
I will go only tomorrow

6. *i:na me:jile: beccëtti*
this (acc.) - in the table-Emp. — put (he)
(some one) put it only in the table

6. 3 'THOUGH'

This expression is denoted by adding the suffix *-u:* to verbal participle.

egs. 1. *avën bandu prayo:jana ille*
he - came (THO.) - use - not
Though he came, there was no use at all

2. *ava nallane o:ditu: gedditille*
she – well – read (THO.) – not win
Though she read well, she did not succeed

6. 4. 'ALSO'

This expression is also denoted by adding the suffix *-u:* to nominals.

egs. *illikï avën-u: bappa*
here — he also — come (he)
He will also come here

2. *alli avaḷ-u: pa:ḍıci*
there — she also — sang (she)
She also sang there

6. 5. 'ATLEAST'

For this expression the suffixes *-e:ṅgi* or *-e:ṅgiyu* is added to nominals.

egs. 1. *allikï avane:ṅgi po:ṇḍu*
there — he atleast — must go
At least he must go there

2. *illikï avaḷe:ṅgiyu baranḍu*
here — she atleast — must come
At least she must come here

6. 6. 'EVEN IF'

This expression is denoted by adding the suffix *-e:ṅgiyu* to verbals.

egs. 1. *avën bande:ṅgiyu prayo:jana ille*
he — came even if — use — not
Even if he came (there) no use at all

2. *ava* *ma:ḍate:ṅgiyu* *paraville*
she — don't do - even if — dosn't matter
Even if she didn't do, that dosn't matter

6.7. COMPLETENESS

Completeness is expressed by adding the suffix-*u* to the numerals and the noun *-ellar* 'all person'

egs. 1. *na:kı* *na:l-u* *bo:ṇdu*
to me - four-all - need
I need all the four

2. *illikı* *ellar-u* *bappa*
here - all people-will come
All of them will come here

6 8. TEMPORAL 'while'/'when'

Temporal expression is expressed by adding the suffix *-kal* to the relative participles.

egs. 1. *na·nï bandè-ka(l) ni·m bandiya*
I - while came - you - came(you)
When I came, you came

2. *ava* *o:do-ka(l)* *ni:m* *o:doṇḍu*
she - while reading - you - must read
While she is reading you must read

6.9 ORDINALS

The ordinal marker *-ane* is added with numerals.

egs. 1. *avèn* *ond-ane* *kıṇṇè*
this man - first - boy
He is the first boy

2. *ni:ni na:l-ane ta ri:kï po:ṇḍu*
you - fourth - date - must go
You must go on fourth

6.10. CONJUNCTIVES

There are two types of conjunctive clitics found in Kodagu they are,

1. u .. ..u and
2. o:... ... ..o:

egs. 1. *avan-u avaḷ-u ba:ñ*
he-u - she-u - came
He and she came

2. *na nu ni:nu o:dulu*
I-u - you-u - can read
I and you can read

3. *aven-o: avaḷ-o: bappa*
he-o: - she-o: - will come
Either he or she will come

4 *na:n-o: avaḷ-o: o:ḍuva*
I-o: - she-o: - will run
Either I or she will run

6.11. DOUBT

The suffix *-o:* is added to nouns for expressing doubt.

egs. *da:r-o:*	who (in doubt)
ni:n-o:	you (in doubt)
na:n-o:	I - (in doubt)

etc.

6.12. It is to be noted that when the clitics of completeness (i.e -*u*) and conjunctive *u.........u* are added with accusative case inflected nouns, a kind of phonemic change is taken place as follows.

egs. *narina-u*
  >*narino:* tiger also (Acc.) (S.46)
avaḷa-u
  >*avaḷo:* she also (,,) (,,)
pandina-u
  >*pandino·* pig also (,,) (,,)
ka:ḍɪna-u
  >*ka:ḍɪno:* forest also (,,) (,,)

1. *narino:* *pandino:* *kollate*
   tiger (acc) - pig (acc) - don't kill
   Don't kill the tiger and pig
2. *avëno:* *avaḷo:* *ka:kiciḍɪ*
   he (acc) -- she(acc.) - invite
   (You) invite him as well as her

7. SANDHI

7.0. A morpheme may have one or more phonemic shape in the total system of any natural language. When a morpheme is represented by more than one phonemic form, all such forms are said to be synchronic variants of a single morpheme. These synchronic variants in the phonemic representations of morphemes constitute SANDHI or MORPHOPHONEMICS of a language There are two types of Sandhi viz. *internal sandhi* and *external sandhi* "Where the synchronic variants are indicated to arrangements of morphemes within a word, we call them 'internal-sandhi', where they are incidental to arrangements of words

within larger constructions, we call them 'external sandhi' (Krishnamurti, 1969:213).

Here the sandhi rules are ordered. Most of the rules are automatic type because "a particular phonemic representation of a morpheme is called for by the phonological system of a language", (Krishnamurti, 1969:213). Some of them are optional rules, which are restricted to certain environments in the language.

External sandhi rules are arranged here after the internal rules with the continuous number of the internal rules The empersand '&' is used to indicate the morpheme boundary and the hyphen '–' indicates the place of occurrence of the phoneme or phonemic sequence. The following rules S. 1 to S. 47 are internal rules and the rest (from S. 48 to 73) are external rules. Though there are some identical rules, they are treated separately due to the internal and external function.

7. 1. INTERNAL SANDHI RULES

S. 1. $$x \rightarrow \phi \;/\; - \& \left\{ \begin{matrix} t \\ k \\ nd \\ p \\ l \\ r \\ \# \end{matrix} \right\}$$

egs. *ka:x&t&ė* > *ka·tė* I waited

modıx&k
> *modïk* make (it) sweet

aḷax&nd&ė
> *aḷandė* I measured

ėḍıx&p&i
> *ėḍïpi* I take

nilx&i
> *nil-i* stop (you-pl.)

kuḷïx&ıï
> *kuḷïri* chilliness

bax > *ba* come (thou)

S.2. $x \Rightarrow k \,/\, - \;\&\; \left\{ \begin{array}{c} a \\ a: \\ u \end{array} \right\}$

egs. *ëḍïx&a*
> *ëḍïka* I will not take

naḍax&a:ṭa
> *naḍaka:ṭa* walking

nilx&u
> *nilku* (He) will stop

S 3. $a \Rightarrow a: /\# \; C - \& \; nd \; \& \; eti$

egs. *ta&nd&etï*
> *ta:-ndeti* he gave

ba&nd&eti
> *ba:-ndetï* he came

S.4. $u \Rightarrow u{:} \, / \, \# \, - \begin{Bmatrix} \phi \\ i \end{Bmatrix}$

egs. *u&ϕ >u:* plough (thou)

u&iri
>u:-iri plough (thee)

S.5. $l \Rightarrow \phi \, / \, \begin{matrix} \text{(C)VC(C)V} - \# \\ \text{CV} - (\&)\, \text{C}^{1} \end{matrix}$

$\text{C}^{1} = k, p, nd$ and v

egs. *pagal*
>paga day time

miññal
>miñña before

nilk&aṅga
>ni-kaṅga we shall stop

nil&picid
>ni-piciḍi make some one to stop (thou)

nil&nd
>nind having stopped

na:l&var
>na:var four persons

S.6. $t \Rightarrow ṭ \, / \, \begin{Bmatrix} \# \, \text{(C)} \, \text{V} \begin{Bmatrix} ḍ \\ ṇ \\ ḷ \end{Bmatrix} \\ ṇḍ \end{Bmatrix} \& -$

egs. *a:ḍ&t >a:ḍ-ṭ* make some one to dance (thou)

ka:ṇ&t
>ka:ṇ-ṭ show it (thou)

ke:ḷ&t&ë
>ke:ḷ-ṭe I asked

urïṇḍ&t
>urïṇḍ-ṭ roll it (thou)

kaṇ&t
>kaṇ&ṭ see

uṇ&t
>uṇ&ṭ eat

S.7. *nd* ⇒ *ṇḍ* / # CVḷ & –

eg. *koḷ&nd&e*
>koḷ-ṇḍë I was having (it)

S.8. *ḷ* ⇒ *φ* / (C)V(C)CV – #
— (&)C'

C'=*k*, *ṭ*, *ḍ*, *ṇḍ*, *p* and *v*.

egs. *avaḷ >ava* she

mo:vaḷ
>mo:va daughter

ba:ḷ&ke
>ba:ke life

ke:ḷ&ṭ&ë
>ke:ṭe I asked

avaḷ&ḍa
>avaḍa her (Gen)

koḷ&ṇḍ&ë
>koṇḍë I was having it

ëḷ&p >ë-pï make to get up (thou)

koḷ&v&i
  >ko-vi I will have it
e:ḷ&var
  >ë:var seven persons

S.9. $\left\{ \begin{matrix} ḍ \\ ṇḍ \end{matrix} \right\} \Rightarrow \phi$ / -& ṭ

egs. *këḍ&ṭ&i*
  >kè-ṭe I spoiled
uriṇḍ&ṭ
  >uriṭ roll it (thou)

S.10. *nd* $\Rightarrow \phi$ / $\left\{ \begin{matrix} ba\cdot \\ ta: \end{matrix} \right\}$ & — & *ëti*

egs. *ba·&nd&ëti*
  >ba:-ëti we came
ta:&nd&ëti
  >ta:-ëti he gave

S.11. ṇ $\Rightarrow \phi$ / # C $\bar{\text{V}}$ & — & ṭ

eg. *ka:ṇ&ṭ*
  >ka:ṭ show (it) (thou)

S.12. ė $\Rightarrow \phi$ / $\left\{ \begin{matrix} ba: \\ ta: \end{matrix} \right\}$ & —
— & $\bar{\text{V}}$

egs. *ba:&ëti*
  >ba:ti we came
ta:&ëti
  >ta:ti he gave
bappë&a:na
  >bappa:na that coming (acc.)

S.13. *ca* ⇒ & *ca* / – &*t*

eg. *ca:&t&e*
  >*ca-te* I dead

S.14. *o* ⇒ *ë* / # (C) V (C) C (V) &–& *ṇ ḍ*

egs. *band &o&ṇḍ&ë*
  > *bandëṇḍë* I came myself

nind&o&ṇḍ&ë
  >*nindëṇḍë* I stopped myself

S.15. $v \Rightarrow b \; / \left\{ \begin{matrix} or \\ ir \end{matrix} \right\}$ &–

egs *or&vën* >*orbën* one man

or&vaḷ >*orba* one woman

ir&var >*irbar* two persons

S.16. $r \Rightarrow \phi \; / \; \begin{matrix} \# \, (C) \, V - (\&) \, C^1 \\ \# \, (C) \, V \, (C) \, C - \# \end{matrix}$

$C^1 = k, \; t, \; p$ and *b*

egs *pork&u* >*po-ku* he may fight

a:r&t >*a:t* make to cool down (thou)

por&p&i >*po-pi* I will fight

or&ben >*o-ben* one man

mu:&var >*mu:va* three persons

S.17. $\begin{bmatrix} t \\ nd \end{bmatrix} \Rightarrow \begin{bmatrix} c \\ \tilde{n}j \end{bmatrix} / \left\{ \begin{matrix} i \\ y \end{matrix} \right\}$ &–

egs.	*piri&tĕ*	
	>piricĕ	I dispersed
	ka:y&ı& >ka:yc	make to boil (water) (thou)
	aṇi&nd&iya	
	>aniñjiya	you wore (ornaments)
	a:y&nd&e	
	>a·yñje	I choosed

$$\text{S. 18}\quad y \Rightarrow \phi \;/\; \begin{array}{l} \#\,(C)\,V\text{—}\&\left\{\begin{array}{c} c \\ \tilde{n}j \end{array}\right\} \\ \#\,(C)\,e{:}/e\text{ — }\&\,p \end{array}$$

egs.	*ka:y&c&ĕ*	
	>ka·cĕ	I boiled water
	a:y&ñj&ĕ	
	>añjĕ	I choosed
	bey&p&i	
	>be–pi	I (will) put
	te:y&p&i	
	>te pi	I will rub

$$\text{S. 19.}\quad \begin{bmatrix} nugg \\ e{:}\underset{\cdot}{l}i \end{bmatrix} \Rightarrow \begin{bmatrix} nu{:} \\ \ddot{e}{:} \end{bmatrix} \;/\; \#\; - \;\& \begin{bmatrix} k \\ va \end{bmatrix} \text{ (Opt.)}$$

egs.	*nugg&k >nu:k*	push it (thou)
	e:ḷi&va >e:va	seven persons

$$\text{S. 20.}\quad \left\{\begin{array}{c} g \\ \dot{n}g \\ \dot{n}\dot{n} \end{array}\right\} \Rightarrow \phi \;/\!-\; \&\, k$$

egs.	*ẹlag&k >ẹlak*	make it to uproot.

aḍaṅg&k
>aḍak subjucate (thou)
puṅṅ&k >pu-k make it to decompose (thou)

S.21. $C^1 \Rightarrow C^1C^1 \; / \begin{array}{l} \#(C)\check{V}\text{-}\ \&\ \left\{\begin{array}{c} V \\ l \\ \# \end{array}\right\} \\ \#(C)\check{V}\&\ — \end{array}$

C^1 = All consonants except *r*, *ś*, *ṣ* and *h*

egs. *kaṇ&oṇḍi*
>kaṇṇoṇḍi with eyes
maṇ&lı
>maṇṇ-lı in the sand
kal >kall stone
o&bėn >obbėn one man
i&ba >ibba two persons

S.22. P ⇒ B / N (&)-

P = Voiceless stop consonants
B = Voiced stop consonants
N = Any nasal consonant, but this is an exception for the rule (S.11)

egs. *uṇ&ṭ&ėtı*
>uṇḍėti he ate
uṇ&p&a
>uṇba we will eat
tink&u >tingu he may eat

S.23. $N^1 \Rightarrow N^2$ / —(&)B

N^1 = Any nasal consonant
N^2 = Homorganic nasal consonant
B = Voiced stop consonants

egs. *uṇ&b&a* >*umba* we will eat

uṇg&u >*uṅgu* he may eat

ayen&ḍa
>*aveṇḍa* their (Gen.)

S.24. $a \Rightarrow e$ / –& *v*

egs. *aḍa&vĭ* >*aḍevĭ* obstrucle

aḍa&v&a >*aḍeva* it will close

S.25. $i \Rightarrow \breve{i}$ / –& *p*

Here *p* is represented as transitive marker.

egs. *kali&p&a*
>*kalĭpa* (It) will be increased (animals)

kuḷi&p&i
>*kuḷĭpi* (I) will make to take bath some one

ari&p&i
>*arĭpi* (I) will send the news.

S.26. $\breve{i} \Rightarrow \begin{bmatrix} a \\ i \\ u \\ e \end{bmatrix}$ / – & $\begin{bmatrix} \dot{n} \\ \breve{e},a \\ v,m \\ v \end{bmatrix}$

egs. *adĭ&ṅ&gĭ*
>*adaṅgi* to it (Dat.)

cerĭ&ĕ >*ceriĕ* small (Adj.)

cerĭ&a >*ceria*

bandirĭ&v&i
>*bandiruvi* (I) will have come

pudĭ&me
>*pudume* new

tadī&v&a
>tadeva (1) will be obstructed

S.27. $ī \Rightarrow \phi$ / $\frac{\#(C)(V)(C)Vr\text{-}\&t}{\text{—}\&V}$

V = *a*, *a:*, *i*, *e* and *o:*

egs. *po:yirī&t*
>po:yirti (It) has gone

na:kī&iñji
>na:kiñji than me (Comp.)

porīḷī&o:ḍe
>porīlo:ḍe with wealth (Soc.)

tanditī&ille
>tanditille (some one) did not give

S.28. $\phi \Rightarrow ī$ / $\frac{\#(C)\ V\ (C)\ C - \#}{\#(V)\ (C)\ V\ (C)\ C^1 - \&C^2}$

C^1 and C^2 can be identical or non-identical consonants but in the case of the rules (S.5), (S.8), (S.9), (S.11), (S.16), (S.18) and (S.20) this rule cannot operate. Those rules are all exceptions for this rule.

egs. *na n >na:nī* I
marat&ki
&maratiki to the tree (Dat.)
ka l&lī >ka·lilī in the leg (Loc.)
no.ṭ&n&ĕ >no:ṭinĕ (I) looked
eḷīd&n&ĕ
>eḷīdīne (I) wrote

S.29. $\phi \Rightarrow v$ / $\left[\begin{matrix}\left\{\begin{matrix}a: \\ o:\end{matrix}\right\} \\ u\end{matrix}\right]$ & – $\left[\begin{matrix}\left\{\begin{matrix}a \\ u\end{matrix}\right\} \\ e, a:\end{matrix}\right]$

egs. *ca:&aṇḍu*
>ca:vaṇḍu (he) must die
ca:&u >ca:vu (he) may die
ë:&aṇḍu
>ë:vaṇḍu (he) must get up
ë:&u >ë·vu (he) may get up
naḍu&e >naḍuve in the middle
bakku&a:
>bakkuva: may he come?

S.30. $\phi \Rightarrow y \,/\, \left\{ \begin{matrix} i \\ e \\ \ddot{e} \\ u\colon \end{matrix} \right\} \&- \mathrm{V}$

egs. *mu:ḍi&a*
>mu:ḍiya girls
u:&iri >u:yiri plongh
are&u >areyu (ıt) may be ground
paḷë&aḍi
>palëyaḍï old (things)
u·&iri >u.yiri plough (thee)

S.31. $i \Rightarrow \phi \,/\, \begin{matrix} \left\{ \begin{matrix} \mathrm{V} \\ y \end{matrix} \right\} \& - \\ \bar{\mathrm{V}}(\mathrm{C})'\mathrm{C})\&\text{-}(\&) \left\{ \begin{matrix} y \\ c \end{matrix} \right\} \end{matrix}$

egs. *mane&iñji*
>maneñji from the house (Abl.)
ba:&iri >ba:ri come (thee)
ay&iri >ayri send (thee)
po:&i&yé >po:yé the man one who have gone

po:&i&ci > *po:ci* (it) has gone

a·&i&yė > *a:ye* that which has done

S. 32. *ėtï* ⇒ ϕ / # (C) (V) (C) V &*t*& – #

egs. *tandir&t&etï*

> *tandirtï* (he) has given

po:yr&t&etï

> *po:yrtï* (he) has gone

$$S.33.\quad aṅga \Rightarrow \begin{bmatrix} a \\ \phi \end{bmatrix} \Big/ - \& \begin{bmatrix} \# \\ \left\{ \begin{matrix} n/l \\ a: \end{matrix} \right\} \end{bmatrix}$$

egs. *po ka&ṅga*

> *po:ka* we shall go.

po·k&aṅga&na

> *po:kana* shall we go?

ma:ḍ&aṅga&la:

> *ma:ḍala* shall we do?

nikk&aṅga&a:

> *nikka* shall we stand / stop

S.34. ϕ ⇒ *u* / # (C) VC (C) (C) & – V

egs. *ėṉṉ–vė* > *eṉṉuve* that which is said

per – ve > *peruve* the woman who is bearing child

urik&v&i

urikuvi (I) will melt it

$$S.35.\quad uvė \Rightarrow o \Big/ \left\{ \begin{matrix} ḍ \\ ḷ \\ yy \end{matrix} \right\} \& - \# \atop - \&$$

egs. *ma:ḍ&uvë*
>ma:ḍo (the work) which is done

ba:ḷ&uvè
>ba:ḷo life which is lived

koyy&uvë
>koyyo harvesting

poyy&uvë&kï
>poyyokï to beat

ma:ḍ&uvë&ñji
>ma:ḍoñji in the time of doing

S.36. $t \Rightarrow \phi \ / \ \left\{ \begin{matrix} jj \\ dd \end{matrix} \right\} \& - \&$

egs. *kejj&t&iti*
>kejjiti having done

nejj&t&ë
>nejjë I spined

gedd&t&ë
>geddë I won

S.37. $d \Rightarrow \phi / - \& t$

eg. *eḷïd&tï*
>eḷïtï script

S.38. $n \Rightarrow \phi \ / \ \begin{matrix} C\ddot{e} - \# \\ d \& - d \end{matrix}$

C = All consonants except *v* and *y*.

egs. *obbèn >obbe* one man

ajjen >ojjë grand father

erapèn >erapë beggar

kaḷḷën > *kaḷḷë* thief (male)
bud-nd-ë > *buddë* I fell down

S.39. $a \Rightarrow \phi \;/\; \left\{ \begin{matrix} a. \\ e \\ o: \end{matrix} \right\} \& - \quad - \& \left\{ \begin{matrix} i \\ a: \end{matrix} \right\}$

egs. *a:&adï* > *a:ḍï* let it be
ma:pḷe&acı > *ma:pḷeci* woman of Mapla caste
po·a&lu > *po:lu* let (us) go
pa:pa&i > *pa:pi* sinner
a:yra&a:ṅgı > *a:yra:ṅgï* for thousand (Dat.)

S 40. $a \Rightarrow \phi \;/\; NB - \left\{ \begin{matrix} ḍ \\ ḷ \\ l \end{matrix} \right\}$ (Opt.)

NB = *ṅg* and *mb*

egs. *aṅgaḍi* > *aṅgḍi* bazzar, shop
ambala > *ambla* village green
kambaḷi > *kambḷi* blanket (woolen)

S.41. $e \Rightarrow \phi \;/\; \begin{matrix} y - N \\ - \& m \end{matrix}$ (Opt.)

N = Nasal consonants

egs. *ayeṅga* > *ayṅga* they
ayena > *ayna* them (Acc.)

ayeṇḍa >*ayeṇḍa* their (Gen.)
tale&mi >*talmi* hair (head)

S. 42. $\begin{bmatrix} ga \\ kï \end{bmatrix} \Rightarrow \phi \,/\, - \,\&\, \begin{bmatrix} kï \\ k \end{bmatrix}$ (Opt.)

egs. *ayṅga&kï*
>*ayṅkï* to them (Dat.)
naṅga&kï
>*naṅkï* to us (Dat.)
ma:ḍokï&kayyu
>*ma:ḍokayyu* can be done
no:ṭokï&kayyu
>*no:ṭokayyu* can be seen

S. 43. $\begin{bmatrix} mo{:}vën \\ mo{:}vaḷ \end{bmatrix} \Rightarrow \begin{bmatrix} mo{:}n \\ mo{:}ḷ \end{bmatrix} \,/\, - \,\&\, e{:}$ (Opt.)

egs. *mo:ven&e:*
>*mo:ne:* son! (used in calling)
mo:vaḷ&e:
>*mo:ḷe:* daughter! (used in calling)

S.44. $v \Rightarrow \phi \,/\, u\text{-}\&l$

egs. *ma:ḍuv&le*
>*ma:ḍule* did not do

S. 45. $d \Rightarrow V \,/\, C\check{V} - \&v$

egs. *bud&va* >*buvva* we will fall
bud&vë >*buvvë* falling

S. 46. *a&u* ⇒ *o*: / N & (*n*)‑#

N = Nouns

egs.	*nari&na&u* >*narino*:	even tiger (Acc)
	avaḷ&a&u >*avaḷo*:	even she (Acc.)

S. 47. *ï* ⇒ *e*: / ‑ & { *ki* / *té* }

egs.	*indi&ki* >*inde.ki*	to this day
	andi&të >*ande:ti*	of that day
	paṇḍï&te >*paṇḍë:te*	of olden days

7.2. EXTERNAL SANDHI RULES

S. 48. *n* ⇒ *ñ* / *y*& ‑

egs:	*ay&nu:ru* >*ayñu:ru*	five hundred

S. 49. *y* ⇒ *ñ* / ‑&*ñ*

eg	*ay&ñu:ru* >*aññu:ru*	five hundred

S. 50. *p* ⇒ *v* / *u*&‑

	iru&padi >*iruvadi*	twenty
	aru&padï >*aruvadï*	sixty

ëḷu&padï
  >ëḷuvadi seventy

S 51. $C^1 \Rightarrow \phi$ / # $C\bar{V}$-&C^2

There is an exception, i.e., when C^1 is a nasal consonant C^2 should not be a stop consonant.

egs. *na:l&padï*
  >na:padi forty

pa:m&maññi
  >pa:maññi mist

ta:y&mane
  >ta:mane bride's house

u:r&ka:ḍu
  >u:ka:ḍu surrounding places of a village

ku:ḷ&ba:ki
  >ku:ba:ki cooked rice broth

S.52. $\left\{ \begin{array}{c} r \\ l \\ ḷ \end{array} \right\} \Rightarrow \phi$ / # (C)V – & C^1

C^1 = *k*, *p*, *c* and *n*

egs. *or&co:ḍi*
  >o-co:ḍi one pair

ir&nu:ri >i-nu:rï two hundred

pil&pore
  >pi-pore grass thatched hut

na:l&nu:rï
  >na:nu:rï four hundred

kaḷ&kuḍi
  >ka-kuḍi toddy drinking

S.53 P ⇛ B / N & -

P = Voiceless stop consonants
B = Voiced stop consonants
N = Any nasal consonant

egs. *aym&padi*
>aymbadi fifty

kem&co:pi
>kemjo:pi red colour

pa:m&koḷa
>pa:mgoḷa flute

S. 54. $N^1 \Rightarrow N^2 /\!- \; \& \begin{Bmatrix} B \\ N^2 \end{Bmatrix}$

N^1 = Any nasal consonant
N^2 = Homorganic nasals
B = Voiced stops

egs. *karim&ge:re*
>kariṅge:re a snake

kem&jo:pi
>keñjo·pi red colour

pa:m&goḷa
>pa:ṅgoḷa flute

S. 55. $\dot{n}N \Rightarrow \phi /\!- \; \& \; B \begin{Bmatrix} a \\ a{:} \\ u \end{Bmatrix}$

N = Homorganic nasal consonants

B = Voiced stops, but it is an exception in the case of bilabial voiced stop followed by the long vowel *a:* (*eg. perim-ba:mbi*)

egs. *karïṅ&gallï*
>ka-gallï black stone

karïṅ&garaḍi
>ka-garaḍi black bear

perïṅ&ga:ṭi
>pe-ga:ṭi big bison

perïm&buli
>be-buli big tiger

S.56. $C^{1} \Rightarrow C^{1}C^{1} \;/\; \begin{matrix} \# \ C \ \check{V} \text{ -- } \& \ V \\ \# \ C \ \check{V} \ \& \text{ -- } V \end{matrix}$

egs. *pan&ondï*
>pannondï eleven

ay&eraṇḍi
>ayyeraṇḍi five into two

nu&padï
>nuppadi thirty

ka&gallï
>kaggallï black stone

pe&buli
>pebbuli big tiger

o&co:ḍi
>occo:ḍi one pair

S.57. $g \Rightarrow \phi$ / # *a:ṅ* & --

eg. *a:ṅ&guññi*
>a:ṅuññi male child

S.58. $a \& p \Rightarrow \phi$ / # (C)V(C)C *o:*

egs. *banda&po:le*
  >bando:le like coming
ninda&po:le
  >nindo:le like standing
ka.ṭiya&po:le
  >ka:ṭiyo:le like showing

S 59. $\phi \Rightarrow y$ / # C V C *i* & – V

egs. *kaḷi&aḍake*
  >kaḷiyaḍake tender areca
koḍi&ele
  >koḍiyele betal leaf
guri&ïḍï
  >guriyïḍï put mark (thou)

S 60. $i \Rightarrow \phi$ / – & $\check{V}$

egs. *añji&a:ḷï*
  >añja:ḷï five servants
añji&aḍi
  >añjaḍi five feet
añji&a:ḍï
  >añja:ḍï five goats

S.61. $\left\{ \begin{matrix} a \\ ï \\ u \\ e \\ ë \end{matrix} \right\} \Rightarrow \phi$ / – & V

egs.

nu:yṭa&ondï	
>nu:yṭondï	hundred and one
nu:yṭa&ë:ḷï	
>nu:yṭë:ḷï	hundred and seven
kuññi&avvë	
>kuññavvë	mother's younger sister
iññu&ondï	
>iññondï	another one
cappe&ele	
>cappele	leaf of *cappe* tree
ka:roṇë&ajji	
>ka:roṇajji	ancestor's father

S.62. $$\left[\left\{ \begin{matrix} a \\ i \\ u \\ ï \\ ë \end{matrix} \right\} \& \; e \right] \Rightarrow \left[\begin{matrix} a: \\ i: \\ u: \\ ï: \\ ë: \end{matrix} \right] \quad \text{(Opt.)}$$

egs.

bappa&endï	
>bappa:ndï	said that (he) will come
bappi&endï	
>bappi:ndi	said that (I) will come
bakku&endï	
>bakku:ndi	said that (he) may come
bandï&endï	
>bandï:ndï	said that (he) came
bandë&endï	
>bandë:ndi	said that (I) came

S. 63. $tt \Rightarrow t \,/\, \text{—}\& \left\{ \begin{matrix} d \\ n \\ m \end{matrix} \right\}$

egs. *tombatt&daṇḍi*
>tombatdaṇḍi ninety two

nuppatt&na:lï
>nuppatna li thirty four

na:patt&mu:ndi
>na:patmu:ndi forty three

S. 64. *ṭṭ ⇒ ṭ / – &mu:rï*

eg. *ëṭṭ&nu:rï*
>ëṭnu·ri eight hundred

S. 65. *padin ⇒ padi / — & { m, n }*

egs. *padin&mu.ndi*
>padimu:nni thirteen

padïn&na:li
>padina:li fourteen

S. 66. *k ⇒ g / { a, e } & —* (Opt.)

egs. *paṇa&ka rë*
>panaga rë rich people

kole&ka re
>kolega:rë murderer

S. 67. *uve ⇒ ϕ – &a*

egs. *ma:ḍuvè&a·na*
>ma:ḍa·na of that doing (Acc.)

no.ṭuve&a:na
>na:ta:na of that look (Acc.)

S. 68. *er* ⇒ ϕ / # $\overline{V}$ *r* &–

egs.	*o:r&ərandı*	
	>o:randı	one by two
	i:r&erandï	
	>i:randï	two by two
	a:r&erandï	
	>a:randı	six by two

S. 69. ϕ ⇒ *v* / *u:&* – V

egs.	*mu:&a:ndï*	
	>mu:va:ndi	three years
	mu:&a:yra	
	>mu:vn.yra	three thousand
	mu:&erandi	
	>mu:verandi	three by two

S. 70. *ën* ⇒ ϕ / & { *ayya* / *ajjë* / *ajji* }

egs.	*akkën&ayya*	
	>akkayya	sister! (for calling)
	muttannën&ajjë	
	>mttannajjë	Muthana (with respect in calling)
	ta.yammën&ajji	
	>ta:yammëajji	Thayamma (with respect in calling)

S. 71. $\phi \Rightarrow$ *ï* ϕ C - & C

egs. *ond-&mara*
>ondï maɪa one tree

daṇḍ&to:ṭa
>daṇḍi to:ṭa two gardens

na:l&mane
>na·li mane four houses.

S. 72. *e* $\Rightarrow$ ϕ / *l* – & *m*

egs. *tale&mette*
>talmette pillow

tale&mi
>talmi head hair

8. SYNTAX

8.0. Every native speaker of a language uses sentences, though he is not concious of the mechanism used in making the sentences In the present analysis sentence is taken as an unit, though it is felt that necessity of higher units viz , para, discourse etc. In all natural languages we find many kinds of sentences such as simple complex and compound; declarative and interrogative; active and passive etc

Among sentences some are basic which cannot be broken into smaller sentences.

1. *avën ba:ti* He came

2. *idï mane* This is house

But there are many other sentences which reading can be split further into smaller and smaller sentences. For example,

3. *na:ni koḍïte pustakatna o:dici*
(He) read that book which I gave

can be split into

4.a. *na·nï pustakatna koḍïte*
I gave that book

and 4.b. *a·na o:dici*
(He) read that

The sentences (3) and (4) have the same meaning but they are different in their structures. To explain this we have to assume two levels of grammatical structures: *surface structure,* which represents the way we utter or write the sentence and *deep structure,* which represents the way we understand the sentence. Grammatical elements are arranged quite differently in these two structures, which will be named as *constituent structure* or *phrase structure.* In the surface structuae grammatical elements are arranged in *linear order.* This type of arrangement corresponds to the way we utter the sentence. In the deep structure they are arranged according to the semantic correlations that we find between various constituents and linear order does not play very important role in it. Between deep and surface structures, we assume a set of *Transformational rules,* which bring out various operation like deletion, permutation, hopping etc.

Thus the syntatic component consists of two major structures: *constituent structure* and *transformation*·

Constituent structure deals with the generation of simple sentences of main types, the equation type and the verb predicate type in Dravidian Languages. All other types are derived by various transformations.

8.1. CONSTITUENT STRUCTURE

Constituent structure consists of a set of rewriting rules. These rules which are called as phrase structure (P.S) rules starting from the initial string which is called utterance (U) going on until we get what may be called preterminal strings. These rules generate all the basic sentences of a language. Not only the simple sentences but other types of sentences are also generated by these rules.

All the sentences are classified into two major-types and they might be called the basic sentences of Kodagu language.

1. NP + NP
2. NP + VP

The other types NP + Adj. and NP + Gen. are included in these types. In both of these types the subject slot is filled by an NP, but the predicate slot is filled either by an NP or by a VP.

egs 1.	NP + NP	*idı mara*	This is (a) tree
2	NP + VP	*na:nı bandè*	I came

There are certain verbs which take object and some others which do not take any. Certain verbs take intensifier whereas certain other verbs do not take any. Because of these kinds of behaviours we can have different sub-types of sentences.

1. NP+OBJECT+N

   avën pustaka o:dici
   He read a book

2. NP+V

   ava ba:tï
   She came

3. NP+INTENSIFIER+V

   na:nï tumba tindë
   I ate much

Like all other natural languages we can have in Kodagu certain items before a sentence as well as after a sentence and this entire unit can be called utterance (U).

8.1.1. U ⇒ (Pr.S U) + S + (Po S.U)

When we rewrite the utterance (U) as stiring of symbols, we have three units viz. Pre Sentencial Units (Pr. S. U.), Sentence (S) and Post Sentencial Units (Po .S. .U). Here sentence (S) is preceded by item Pr. S. U., which are formed as vocative (Voc.) or interjection (INT.) and followed by Po.S.U., which include clitics (Cl.) or interrogative (Int.), both are optional items and they are expanded later.

egs. 1. *e: ni:nï ba:*
   Hey! you come

2. *ayyo: avën cattëti*
   Alas! he is dead

Kodagu has a number of clitics like *-u*, *-e:* etc., which are suffixed to any one of the constituents in a sentence.

And also the interrogative *-a:* is also added to any one of the constituents. These suffixes can be added to any one of the constituents in a sentence, but one at a time in the final stage.

egs. 1. *aven elliy-u po:pa*
He will go everywhere

2 *illi aval-e: bakku*
She alone may come here

3. *aval-a: ba:tı*
It is she who came?

4. *ava ba:t-a:*
Did she came?

As these items are optionally added to the sentence we will be able to have sentences of the following types as independent units.

egs. 1, *ni:nï bandiya*
You came

2. *iva illikı ba:ti*
This woman came here

Thus the vocative and interjection are included pre-sentential forms and interrogatives are included post-sentential elements atleast in the surface level.

8. 1. 2. $S \Rightarrow NP + \begin{Bmatrix} NP \\ VP \end{Bmatrix}$

As already mentioned only two basic sentence types are set up and all other types are derived from them.

1. NP+NP

   adī u·rī That is village

2. NP+VP

   avën ba.tī He came

8. 1. 3. NP ⇒ (S) + NP^1

The above rule is a recursive rule and it makes provision for deriving relative clause etc. Mention has to be made that in all natural languages we find recursion and Kodagu is not an exception to this. In Kodagu we find expressions like,

bandë kinnë the boy who came

o:dīnë pustaka the book which (some one) read

and they are derived by the following rule.

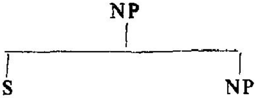

8. 1. 4. NP^1 ⇒ $\left\{ \begin{matrix} PN \\ NP^2 \end{matrix} \right\}$

NP^1 is further classified into pronoun (PN) and other nouns (NP^2), on the basis of the fact that NP^2 alone can be preceded by any adjective or genitive.

egs 1. *balliyë mane* big house

2. *avënda mo:vën* his son

but 3. **balliye avën*

4. **nallë ni:ni*

are ungrammatical sentences.

8. 1. 5. $Np^2 \Rightarrow \left\{ \begin{matrix} Nqu \\ NP^3 \end{matrix} \right\}$

NP^2 is divided into Nqu and NP^3. Nqu stands for quantitative indefinite and universel nouns. They are explained in the following rules.

8. 1. 6 $Nqu \Rightarrow \left\{ \begin{matrix} Nq.\ ind \\ Nq.\ uni \end{matrix} \right\}$

Nqu is divided into Nq. ind and Nq. uni. Nq. ind stands for indefinite nouns denoting quantity and Nq. uni for universal nouns denoting quantity, which can be further classified.

Nq. ind:-

egs.	*cannë*	small amount
	cannengï	-id-
	tumba	great amount

8 1. 7. $Nq\cdot uni \Rightarrow \left\{ \begin{matrix} Nq\ u\ c \\ Nq\ u.\ h \end{matrix} \right\}$

Nq.uni is sub-divided into common and human nouns.

Nq. u. c:-

egs.	*ella*	all, whole
	oṭṭi	whole

Nq. u. h.–

eg.	*ellaru*	all persons

8.1.8. $NP^3 \Rightarrow (DA)+N$

DA stands for demonstrative adjectives, which occur before all nouns. A noun may or may not take a demonstrative adjective.

DA + N:–

egs.	*a: u:rï*	that village
	i: mane	this house

N:–

egs.	*u:rï*	village
	to:ta	garden

8.1.9. $DA \Rightarrow \left\{ \begin{matrix} PA \\ RA \end{matrix} \right\}$

Demonstrative adjectives are divided into proximate (PA) and remote (RA).

PA:–	*i:*	this
eg.	*i: kïṇṇë*	this boy
RA:-	*a:*	that
eg.	*a: mane*	that house

8.1.10. $N \Rightarrow \left\{ \begin{matrix} HUM \\ NHUM \end{matrix} \right\}$

All nouns are classified into two major groups viz., human (HUM) and non-human (NHUM). This classification is to be done in Kodagu as all human nouns tak

da:rï or *a:rï* 'who' and all non-human nouns take *ennï* 'what' as their interrogative pronouns.

egs. 1. *avën da:rï/a:rï* who is he?

2 *ava da:rï/a:rï* who is she?

3. *ayïga da:rï/a:rï* who are they?

4. *adï ennï* what is that?

8.1.11. HUM ⇒ $\left\{ \begin{matrix} HP \\ HC \end{matrix} \right\}$

Human singular nouns are classified into two viz., human proper (HP) and human common (HC) nouns. This classification is made as the nouns of HP do not take plural marker whereas the nouns of HC take the plural marker. Semantically the proper nouns can be further classified into masculine and feminine, but this division is not made here. All the human proper nouns can optionally take a honorific marker. The following rule takes care of this fact

8.1.12. HP⇒ HP (Hon. M)

The honorific marker (Hon. M) used in Kodagu is *ayïga* and this can be added to all proper nouns irrespective of their genders.

egs. *kariyappë ayïga* Cariappa–Hon. (Masc.)

so:maṇṇë ayïga Somanna-Hon. (,,)

ka ve:ri ayïga Kaveri–Hon. (Fem.)

etc.

8.1.13 HC⇒HCo (pl)

Human common nouns can take plural markers.

egs.	*aṇṇèn-kaḷ*	elder brothers
	akkën-kaḷ	elder sisters
	pa:vi-yaḷ	sinners
	etc.	

8.1.14. $HCo \Rightarrow \begin{Bmatrix} HCo.\ S \\ HCo.\ D \end{Bmatrix}$

HCo. S stands for simple nouns and HCo. D stands for derived nouns. A noun of HCo. D consists of a noun and a gender suffix. There also we can find the conjugated or participial nouns (§ 2.7).

8.1.15. $HCo.\ S \Rightarrow \begin{Bmatrix} Nm \\ Nf \\ Nc \end{Bmatrix}$

HCo. S is further classified into masculine, feminine and common nouns.

1. Nm:-

egs.	*aṇṇën*	elder brother
	kïṇṇèn	boy
	mo:ci	cobler
	tacca:ri	carpenter

2. Nf:-

egs.	*akkèn*	elder sister
	avvën	mother

poṇṇi	wife
ra:ṇi	queen

3. Nc:-

egs.	*ana:te*	orphan
	kavi	poet
	pa:vi	innocent person

$$8.1.16.\ \text{HCo.D} \Rightarrow \text{St} + \left\{\begin{matrix}\text{M.S}\\ \text{F.S}\\ \text{Ep.Pl}\\ \text{C.S}\end{matrix}\right\}$$

The derived human common nouns are formed by adding certain other stems, which are treated here. M.S stands for masculine suffix; F.S stands for feminine, Ep.Pl stands for epicene plural and C.S stands for common gender marker.

1. St + M.S:-

egs.	*ajj-en*	grand father
	kaḷḷ-en	thief (Masc.)
	kuṇḍ-en	blind man
	koḍav-en	Kodava caste man
	ma:v-en	father-in-law
	etc.	

2. St + F.S.-

egs.	*ajj-i*	grand mother
	kaḷḷ-i	thief (Fem.)

koṅgiṇi-ci	Konkini lady
koḍav-ati	Kodava lady
macciṇ-i	sister-in-law (younger)

etc.

3. St + Ep.Pl:-

egs.	*erav-aḷ*	Erava caste people
	kurïḍ-aḷ	blind people
	koḍav-aḷ	Kodava people
	gavḍ-aḷ	Gowda caste people
	paṇik-aḷ	Panike caste people
	etc.	

4. St + C.S:-

egs.	*pa:pa-i*	sinner
	vya:pa.ra-i	seller
	paro:paka:ra-i	helper
	etc.	

8.1.17. $\text{NHUM} \Rightarrow \left\{ \begin{array}{c} \text{NAN} \\ \text{NIN} \end{array} \right\}$

Non-human nouns are divided into two classes viz., animate (NAN) and inanimate (NIN) since the animate nouns are obligatorily taking plural markers whereas the inanimate nouns do not take plural markers.

8.1.18. NAN ⇒ NAN.S (Pl)

egs.	*co:mën*	bullock
	nari	tiger

ka:ke	crow
etc	

2. NAN.S + Pl:-

egs.	*co:mėn-kaḷ*	bullocks
	nari-yaḷ	tigers
	ka.ke-yaḷ	crows
	etc.	

8.1.19. $NIN \Rightarrow \left\{ \begin{array}{l} NIN\,P \\ NIN.C \\ NUMB \end{array} \right\}$

Inanimate nouns are classified into three classes. NIN.P stands for names of months, days etc., NIN.C Stands for common inanimate nouns except numerals and NUMB stands for numerical nouns

8. 1. 20. $NIN\ P \Rightarrow \left\{ \begin{array}{l} NIN_{pm} \\ NIN_{pd} \\ NIN_{po} \end{array} \right\}$

NIN. P is again divided into three classes. NIN_{PM} stands for months; NIN_{Pd} stands for week days and NIN_{Po} stands for the names of other proper nouns like places, rivers, mountains etc.

1. NIN_{pm} :-

egs.	*darmiya:ri*	name of the first month (Jan-Feb.)
	ma:liya ri	" second " (Feb.-Mar.)

kumbiya:ṙi	name of the third month	(Mar.-Apr.)
mi:niya:ṙi	,, fourth ,,	(Apl.-May)
ëḍëmiya:ṙi	,, fifth ,,	May.-Jun.)
ka:diya:ṙi	,, sixth ,,	(Jun.-Jul.)
a:dare	,, seventh ,,	(Jul.-Aug)
kakkaḍe	,, eighth ,,	(Aug.-Sep.)
ciṅṅya:ṙi	,, ninth ,,	(Sep.-Oct.)
kanniya.ṙi	,, tenth ,,	(Oct.-Nov.)
toleya:ri	,, eleventh ,,	(Nov.-Dec.)
biṙiciya ṙi	,, twelfth ,,	(Dec.-Jan.)

2. NINpd:-

egs.	*na:ra:ce*	Sunday
	tiṅgaḷa:ce	Monday
	covva:ce	Tuesday
	padïna:ce	Wednesday
	be:ḷa:ce	Thursday
	boḷḷiya:ce	Friday
	caniya:ce	Saturday

3. NINpo:- .

egi.	*madike:ri*	Mercara – a place
	ka:ve:ri	Cauvery – a river
	kutta	Kutta – a place
	etc.	

8.1.21. NIN.C ⇒ $\left\{ \begin{array}{l} NIN_{dr} \\ NIN_{act} \\ NIN_{con} \\ NIN_{co} \end{array} \right\}$

Inanimate common nouns are classified as nouns denoting direction (NIN_{dr}), nouns denoting action (NIN_{act}), nouns denoting certain concepts (NIN_{con}) and nouns denoting other objects (NIN^{co}). NIN_{con} and NIN_{co} can be further classified.

1. NIN_{dr} :-

egs.	*ke:kï*	East
	me:kï	West
	tekki	South
	badakï	North

2. NIN_{act}

egs.	*adi*	blow
	a:ta	dance
	no:ti	look
	pa:tï	song
	po.kï	behaviour
	etc.	

The action nouns are derived from verbs by adding some verbal derivatives like *-a*, *-kï*, *-pï*, *-vï*, *-ϕ* etc., in Kodagu. (For detail see § 2.8)

8.1.22. $NIN_{con} \Rightarrow \begin{Bmatrix} N_{cl} \\ N_{sh} \\ N_{ta} \\ N_{con,o} \end{Bmatrix}$

NIN_{con} is classified as nouns of colour (N_{cl}), shape (N_{sh}), taste (N_{ta}) and other nouns of obstraction ($N_{con\ o}$).

1 Ncl:-

egs.	*karïpï*	black
	co:pï	red
	ni:la	blue
	pacce	green
	boḷḷë	white
	etc.	

Nsh:-

egs.	*udda*	height
	baṭṭa	round, circle
	etc.	

Nta:-

egs.	*ka:ra*	bitterness
	puḷi	sour
	modïra	sweetness
	ect.	

4. Ncon .o :-

egs.	*a:śe*	desire
	ca:yi	beauty
	ña:ṇa	shyness
	pri:ti	love
	etc.	

8. 1. 23. $NIN_{co} \Rightarrow \begin{Bmatrix} NIN_{cou} \\ NIN_{ma} \end{Bmatrix}$

NIN_{co} is further classified into inanimate count nouns (NIN_{cou}) and inanimate mass nouns (NIN_{mas}).

Count nouns include (1) place nouns, which can be substituted by *alli* 'there', *illi* 'here' and *elli* 'where'; (2) time nouns, which can be substituted by *akka* 'then', *ikka* 'now' and *ekka* 'when'; (3) nouns denoting sense organs like *kaṇṇï* 'eye', *ba yi* 'mouth' *kemi* 'ear' etc , as they take the suffix *-a:re*; (4) nouns denoting body parts like *ka:lı* 'leg', *kay* 'arm' etc ; (5) nouns denoting flora like *a:lı* 'banyan tree', *ba:ḷe* 'plantain' etc., and (6) nouns denoting objects like *pustaka* 'book', *me:ji* 'table' etc.

Those nouns, which are countless are grouped under mass nouns. They are *ni:ri* 'water', *ku:ṭa* 'crowd' *pa:lï* 'milk' etc.

8. 1. 24. NUMB ⇒ (NU_a) (NU^1)

Numerals (NUMB) as in other languages are found as a sub class of NIN (rule 19) and it is rewritten here as NU_a plus NU^1. Both NU_a and NU^1 are optional items.

If this rule can be operated the resultant forms are NU_a or NU^1 or $NU_a + NU^1$ When all constituents in the right side of the arrow (⇒) are optional, atleast one of the constituents must be chosen. Here NU^1 stands for the names of the numbers. One to ten and NU_a can be further expanded.

8.1.25. $NU_a \Rightarrow (NU_{\bar{b}})\ (NU^2)$

NU^2 stands for multiples of ten·

egs.	*patti*	ten
	iruvadi	twenty
	muppadi	thirty
	na:padi	forty
	aymbadi	fifty
	aṛuvadi	sixty
	ëḷuvadi	seventy
	ëmbadi	eighty
	tombadi	ninety

· If it is choosen as $NU_a + NU^1$ as found in rule 24, this rule must be operated and the result is the following string.

i.e $NU_b + NU^2 + NU^1$

NU_b can be further expanded. Following are the examples for $NU^2 + NU^1$

egs.	*pannondi*	eleven
	panneraṇḍi	twelve
	padimu:ndi	thirteen
	padïna:li	fourteen

padïnañji	fifteen
padïna:ri	sixteen
padïnė:ḷï	seventeen
padïnėṭṭï	eighteen
pattoymbadï	nineteen
iruvattondï	twenty one
iruvatdaṇḍï	twenty two
iruvatmu:ndï	twenty three
iruvetna:li	twenty four
iruvattañji	twenty five
iruvatta:rï	twenty six
iruvattė:ḷi	twenty seven
iruvattėṭṭi	twenty eight
iruvattoymbadï	twenty nine
muppattondi	thirty one
nuppatdaṇḍï	thirty two
nuppatmu:ndï	thirty three
nuppatna.li	thirty four
nuppattañji	thirty five
nupptta:ri	thirty six
nuppattė:ḷi	thirty seven
nuppattėṭṭi	thirty eight
nuppattoymbadi	thirty nine
na:pattondi	forty one
na:paṭdaṇḍi	forty two
na:patmu:ndi	forty three
na:patna:li	torty four
na pattañji	forty five

na:patta:rï	forty six
na:patte:ḷï	forty seven
na:patteṭṭï	forty eight
na:pattoymbadï	forty nine
aymbattondï	fifty one
aymbatdaṇḍï	fifty two
aymbatmu:ndï	fifty three
aymbatna:lï	fifty four
aymbattañji	fifty five
aymbatta:rï	fifty six
aymbattè:ḷï	fifty seven
aymbattëṭṭï	fifty eight
aymbattoymbadï	fifty nine
aruvattondï	sixty one
aruvatdaṇḍï	sixty two
aruvatmu:ndi	sixty three
aruvatna:lï	sixty four
aruvattañji	sixty five
aruvatta:rï	sixty six
aruvattë:ḷï	sixty seven
aruvatteṭṭï	sixty eight
aruvattoymbadï	sixty nine
ëḷuvattondï	seventy one
ëḷuvatdaṇḍï	seventy two
ëluvatmu:ndï	seventy three
ëluvatna:lï	seventy four
ëḷuvattañji	seventy five
ëḷuvatta.rï	seventy six

eḷuvattē:ḷi	seventy seven
ēluvattēṭṭi	seventy eight
ēḷuvattoymbadi	seventy nine
ēmbattondi	eighty one
ēmbatdaṇḍi	eighty two
ēmbatmu:ndi	eighty three
ēmbatna:ḷi	eighty four
ēmbattañji	eighty five
ēmbatta:ri	eighty six
embattē:ḷi	eighty seven
ēmbatteṭṭi	eighty eight
ēmbattoymbadi	eighty nine
tombattondi	ninety one
tombatdaṇḍi	ninety two
tombatmu:ndi	ninety three
tombatna:ḷi	ninety four
tombattañji	ninety five
tombatta:ri	ninety six
tombattē:ḷi	ninety seven
tombattēṭṭi	ninety eight
tombattoymbadi	ninety nine

8.1.26. $NU_b \Rightarrow (NU_{\bar{c}}) (NU^{3})$

NU^{4} stands for the multiples of hundred and it can be followed by NU^{1}, or NU^{3} or $NU^{2} + NU^{1}$.

1. NU^{3} :-

egs.	*nu:ri*	hundred
	innu:ri	two hundred

munnu:ṛï	three hundred
na:nu:ṛï	four hundred
añña:ṛï	five hundred
a:rnu:ṛï	six hundred
e:ḷnu:ṛï	seven hundred
eṭnu:ṛï	eight hundred
oymbaynu:ṛï	nine hundred

2. NU³ + NU¹ :-

egs.	*nu:yṭondï*	hundred and one
	nu:yṭadaṇḍï	hundred and two
	nu:yṭamu:ndï	hundred and three
	nu:yṭana:lï	hundred and four
	nu:yṭañji	hundred and five
	nu:yṭa:rï	hundred and six
	nu:yṭe:ḷï	hundred and seven
	nu:yṭeṭṭï	hundred and eight
	nu:yṭoymbadï	hundred and nine

3. NU³ + NU² :-

egs	*nu:yṭapattï*	hundred and ten
	nu:yṭiruvadï	hundred and twenty
	nu:yṭanuppadï	hundred and thirty
	etc.	

4. NU³ + NU² + NU¹ :-

egs.	*nu:yṭa pannondï*	hundred and eleven
	nu:yṭiruvattondï	hundred and twenty one

nu:yṭanuppattondi hundred and thirty one
nu:yṭanuppatdaṇḍi hundred and thirty two
etc

8.1.27. $NU_c \Rightarrow (NU_d)\ (NU^4)$

NU^4 stands for the multiples of thousand. NU_d will be further expanded. NU^4 may followed by any one or two or all the three items of NU^3, NU^2 and NU^1; but the sequence should be in order i.e., from the higher to the lower.

1. NU^4 :-

eg. *a.yra* thousand

2. $NU^4 + NU^3$:-

eg. *a:yratinnu:ṛi* one thousand and two hundred

3. $NU^4 + NU^3 + NU^1$:-

eg *a yratinnu:ytondi* one thousand two hundred and one

4. $NU^4 + NU^3 + NU^2$:-

eg. *a:yratinnu:yṭaymbadi*
one thousand two hundred and fifty

5. $NU^4 + NU^3 + NU^2 + NU^1$:-

eg *a:yratinnu:yṭaymbattondi*
one thousand two hundred and fifty one

6. $NU^4 + NU^2$:-

eg. *a:yratiruvadi* one thousand and twenty

7. $NU^4 + NU^2 + NU^1$:-

eg. *a:yratiruvattondi* one thousand and twenty one

8. $NU^4 + NU^1$:-

eg *a:yratondi* one thousand and one

8.1.28. $NU^d \Rightarrow (NU_e)\ (NU^6)$

NU^5 stands for all the multiples of lakh (100,000). NU_e is further expanded. NU^6 may be followed by one or combination of all constituents in the order as it is explained in rule 8.1.27.

1. NU^5 :-

eg. *lakṣa* 100,000

2. $NU^5 + NU^1$:-

eg. *lakṣatondi* 100,001 etc ,

3 $NU^5 + NU^2$:-

eg. *lakṣatiruvadi* 100,020 etc.,

4. $NU^5 + NU^3$:-

eg. *lakṣatinnu:ri* 100,200 etc.,

5. $NU^5 + NU^4$:-

eg. *lakṣata:yra* 101,000 etc.,

6. $NU^5 + NU^4 + NU^1$ -

eg. *lakṣata:yratondī* 101,001 etc.,

7. $NU^6 + NU^5 + NU^2 + NU^1$:-

eg. *lakṣata:yratiruvatondī*

101,021 etc.,

8. $NU^5 + NU^4 + NU^3 + NU^2 + NU^1$:-

eg. *lakṣata:yratinnu:yṭiruvatondī*

101,221 etc.,

etc.,

8.1.29. $NU_e \Rightarrow$ (NUMB) NUko:

NUe is expanded as NUMB + NUko:. NUMB is an optional item in this rule. Whenever NUMB is chosen it must be again rewritten as it is shown in rule 8.1.24. The rule 8.1.24 is a recursive rule. Here NUko: stands for *ko:ṭi* 'crore', which can be followed by all the possible combinations of (NU^5) (NU^4) (NU^3) (NU^2) or (NU^1). All the combinations that occur after NUko: can also precede it.

1. NUko. .-

eg *ko ṭi* 10,000,000

2. NUko: + NU^1 :-

eg *koṭiyondī* 10,000,001 etc..

3. NUko: + NU^2 :-

eg. *ko:ṭipattī* 10,000,010

4. $NU_{ko:} + NU^{1}$:-

eg. *ko:ṭinu.rı* 10,000,100

5. $NU_{ko:} + NU^{4}$:-

eg. *koṭiya:yıa* 10,100,000

6. $NU_{ko:} + NU^{5}$:-

eg. *koṭilakṣa* 10,100,000

7. $NU_{ko:} + NU^{5} + NU^{1}$ -

eg. *ko:ṭilakṣatondi* 10,100,001 etc ,

8 $NU_{ko:} + NU^{5} + NU^{2} + NU^{1}$:-

eg *koṭilakṣatpannondi* 10,100,111 etc.,

9. $NU_{ko:} + NU^{5} + NU^{3} + NU^{2} + NU^{1}$:

eg. *koṭilakṣatnu:nyṭapannondi* 10,100,111 etc.,

10. $NU_{ko:}$ NU $+ NU^{4} + NU^{3} + NU^{2} + NU^{1}$:-

eg. *ko.ṭilakṣata:yratnu:yṭapannondi* 10,101,111 etc.,

etc.,

8.1.30. $NU^{5} \Rightarrow (NU_{m})\ NU_{la}$

NU^{5} (in rule 8.1 28) is being further expanded here. NU_{la} stands for the numeral *lakṣa* 'lakh' NU_{m} is to explained in the next rule.

8.1.31. $NU^{m} \Rightarrow (NU^{2})\ (NU^{1})$

NU_{m} is rewritten into NU^{2} plus NU^{1}. As already stated in rule 8.1.24 it is to be chosen atleast one when all constituents are optional in a rule. This rule can give NU^{2} or NU^{1} or $NU^{2} + NU^{1}$.

1. $NU^1 + NU$*la* :-

eg. *dandi lakṣa* 200,000 etc.,

2. $NU^2 + NU$*la*:-

eg. *iruvadi lakṣa* 20,00,000 etc ,

3. $NU^2 + NU^1 + NU$*la*:-

eg. *iruvaidandi lakṣa* 22,00,000 etc.,

8, 1. 32. $NU^4 \Rightarrow (NU_m)\ NU$*a*.

NU^4 (in rule 8 1. 27) is again rewritten as $NU_m + NU$*a*:, where NU_m is an optional item. NU*a*: stands for the item *a:yra* 'thousand' and NU_m has been already explained in the previous rule.

1. $NU^1 + NU$*a*:-

eg. *a:ra:yra* 6,000 etc.,

2. $NU^2 + NU$*a*:-

eg. *aruvada:yra* 60,000 etc.,

3. $NU^2 + NU^1 + NU$*a*:-

eg. *aravatta:ra:yra* 66,000 etc.,

8. 1. 33 $NU^3 \Rightarrow (NU^1)\ NU$*nu*:

NU^3 (in rule 8. 1 26) is rewritten here as $NU^1 + NU$*nu*:, where NU^1 is optional NU*nu*: stands for the item *nu:rï* 'hundred'.

1 $NU^1 + NU$*nu*:

egs. *innu:ri* 200

na:nu:ri 400 etc.,

8. 1. 34. $NU^2 \Rightarrow (NU^1)\ NUp$

NU² (in rule 8. 1. 25) is rewritten as NU¹ plus NU*p*. NU¹ is an optional item which has already been explained in 8. 1. 24. NU*p* stands for *pattï* 'ten'

1. NU¹ + NU*p*:-

egs.	*iruvadï*	20
	na:padï	40 etc.,

It is to be noted that *ondï* 'one' is usually dropped when followed by NU*p*, NU*nu:* , NU*a*. , NU*la* or NU*ko:*.

egs.	*ondï pattï*	
	>*pattï*	ten
	ondï nu:rï	
	>*nu:rï*	hundred
	ondï a:yra	
	>*a:yra*	thousand
	ondï lakṣa	
	>*lakṣa*	lakh
	ondï ko:ṭï	
	>*ko:ṭï*	crore

8. 1. 35. $PN \Rightarrow \begin{Bmatrix} PPN \\ DPN \end{Bmatrix}$

Pronoun (PN) is taken as a sub-class of NP¹ (rule 8. 1. 4) and it is rewritten here as PPN and DPN. PPN stands for personal pronouns, which have only number distinction and DPN stands for the demonstrative pronoun, which have gender distinction.

8.1.36. $$PPN \Rightarrow \left\{ \begin{matrix} PPN\text{-}1 \\ PPN\text{-}2 \\ RPN \end{matrix} \right\} + Nr$$

PPN classified into first person pronoun (PPN - 1) second person pronoun (PPN - 2) and reflexive pronoun (RPN). Nr stands for number marker, which occurs obligatorilly. (See for detail § 1.6.1 & 1.6.2).

8.1.37 $$DPN \Rightarrow \left\{ \begin{matrix} DPN - 1 \\ DPN - 2 \end{matrix} \right\} + GN$$

DPN is classifisd into remote (DPN - 1) and proximate (DPN - 2) pronouns. GN stands for gender number markers. (see for detail § 1.6.3)

8.1.38. $$VP \Rightarrow \left\{ \begin{matrix} ADJ \\ GEN \\ VP' \end{matrix} \right\}$$

Verb phrase (VP) consists of three elements, viz., adjectival phrase (ADJ), genitive construction (GEN) and verbal construction (VP').

egs 1. *kīṇṇe nallaven* boy is good (ADJ)
2 *mane na:ḍadi* the house is mine (GEN)
3 *aven ba:n* he came (VP')

The above three constructions can be relativized as *nalle kinnë* 'good boy', *na:ḍa mane* 'my house' and *bandë avën* 'he who came' respectively It has to be mentioned that adjectives are considered as verbs (Lakoff, 1970:115 - 133). Here the adjectives and verbs are members of a single lexical category that is called verb and that they differ

only by a single syntactic feature, that is called adjectival. In the case of ADJ, GEN and VP^1 examples are given with concord elements for the sake of convenience.

8.1.39. $VP^1 \Rightarrow (ADV-P)\ VP^2$

VP^1 is expanded as adverbial phrase (ADV.P) plus verb phrase (VP^2). ADV.P is an optional item.

$$8.1.40.\quad ADV.\,P \Rightarrow \begin{Bmatrix} ADV.\,P-1 \\ ADV.\,P-2 \end{Bmatrix}$$

The adverbials are divided into two classes, viz., ADV.P – 1 and ADV.P – 2. ADV P – 1 includes a sentence as an optional item whereas ADV.P - 2 includes a sentence as an obligatory item and these two are again expanded in the following rules.

$$8.1.41.\quad ADV.\,P\text{-}1 \Rightarrow (S)\begin{Bmatrix} ADV_t \\ ADV_m \\ ADV_{concess} \\ ADV_{cond} \\ ADV_c \end{Bmatrix}$$

ADV_t and ADV_m are further divided in the following rules. These adverbials may or may not be preceded by a sentence (S). $ADV_{concess}$ stands for items like *a:ceṅgiyu/eṅgiyu* 'even then', ADV_{cond} for *a:ceṅgi/eṅgi* 'if it is so' and ADV_c for *a:naguṇḍï* 'on account of that' etc.

Usually these adverbial phrases followed by the matrix sentences though they are placed here after the NP of the matrix sentence. This kind of change in order can taken be care of by a transfomational rule. i.e.,

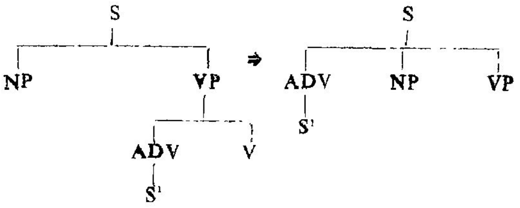

1. NP – S – ADV$_{concess}$ – VP^{2} :-

eg. 1. *na:nï – avèn bappa – a:ceṅgiyu – bappule* ⇒

I – he will come – even then – will not come

1. a. *na:nï avèn ba:teṅgiyu bappule*

1. b. *aven ba:teṅgiyu na:ni bappule*

1. c. *avèn bappa a:ceṅgiyu na:ni bappule*

He will come, even then I will not come

2. NP – S – ADV cond – VP^{2} :-

eg. 1. *na:ni – avèn bappa – a:ceṅgi – bappi* ⇒

I – he will come – if it is so – (I) will come

1. a *na:ni avèn ba:teṅgi bappi*

1. b. *aven ba:teṅgi na:ni bappi*

1. c. *aven bappa a:ceṅgi na:ni bappi*

He will come if it is so I will come

3. NP – S – ADV$_{c}$ – VP^{2} :-

eg. 1. *na:ni – ni:ni kè:ṭiya – a:naguṇḍi – koḍïte* ⇒

I – you asked – therefore – (I) gave

1. a. *na:nï ni:nï ke:ṭa:naguṇḍi koḍïte*

1. b. *ni:nï kè:ṭa:naguṇḍi na:nï koḍïte*

1. c. *ni:ni kèṭiya a:naguṇḍï koḍite*

Because you asked I gave it

8.1.42. ADV. P - 2 ⇒ S $\begin{Bmatrix} \text{Conj. pp} \\ \text{Cont. pp} \\ \text{Quot. m} \\ \text{Compl.m} \end{Bmatrix}$

ADV. P - 2 is divided into four sub-classes, viz., conjuctive phrase (Conj.pp), continueous phrase (Cont pp) quotative marker (Quot.m) and completive marker (Compl.m). Actual sentences are obtained only after applying relevant transformational and morphophonemic rules.

1. NP - S - conj.pp - VP[2]

eg. 1. *avën - avën illiki ba:tï* - Conj.pp - *nanna - noṭici* ⇒
he - he came here - - me saw

1. a. *avën illiki bandi nanna no.ṭici*

or

1. b. *aven illiki bandïu nanna noṭici*

He came here and saw me

2. NP - S - cont.PP - VP[2]

eg. 1. *avèn - avèn no:ṭici* - Con pp ; *po ci* ⇒
he - he saw - - went
aven noṭyeṇḍi po:ci
He saw while going

3. NP - S - Quot.m - VP[2]

eg. 1. *avën - ni:ni bappïya* - Quot.m - *eṇṇici* ⇒
he - you will come - - said (he)
avën ni:ni bappiya:ndï ëṇṇici
He said that you would come

4. NP - S - Compl.m - VP²

1. *aven - avën mandri* - Compl.m - *undi*
he - he - (is) minister - is - he

aven mandriya:yn undi
He is minister

8.1·43. ADVt ⇒ $\begin{Bmatrix} \text{Adv.t} - 1 \\ \text{Adv.t} - 2 \\ \text{Adv.t} - 3 \\ \text{Adv.t} - 4 \end{Bmatrix}$

Adverb of time (ADVt) introduced in rule 41 is classified into four classes.

1. NP - S - Adv.t - 1 - V¹

1. *na:nï - avën ba:tï - akka - po:në* ⇒
I - he came - then - went - I

1. a. *na:nï avën bandëka po:në*

1. b. *avën bandëka na:nï po:në*

1. c. *avën ba:tï akka na:nï po:në*

I went when he came

2. NP - S - Adv.t - 2 - VP²

eg. 1. *avën - na:nï bandë - akkaṇeke - po:ci* ⇒
he - I came - immediately - went he

1. a. *avën na:nï bandakkaṇeke po:ci*

1. b. *na:nï bandakkaṇeke aven po:ci*

1. c *na:nï bandë akkaṇeke aven po:ci*

I came as soon as he went

3. NP – S - Adv.t – 3 – VP²

eg. 1. *ni:ni – avën bappa – piñña – po:lu*

you – he will come - then - may go

1. a. *ni:ni avën bande piñña po·lu*

1. b. *avën bandë piñña ni:ni po:lu*

1. c. *avën bappa piñña ni:ni po:li*

You may go after (the time in which) he comes

4. NP – S – Adv.t – 4 – VP²

1. *avën – na:nï. kë:pi – miñña – koḍitetï*

he – I will ask – before – gave - he

1. a. *avën na:nï kë:pa:ngï miñña koḍitetï*

1. b. *na:nï ke:pa:ngï miñña avën koḍitetï*

1 c. *na:nï kë.pi a·ngi miñña avën koḍitetï*

He gave (it) before I ask

8.1.44. ADVm ⇒ $\left\{\begin{array}{l}\text{Adv. accord}\\ \text{Adv. effect}\end{array}\right\}$

Here Adv. accord stands for the expression *anakė* 'like' and Adv. effect for *aceëkï* 'that much'.

1. NP – S – Adv. accord – VP¹

eg. 1. *avën – na:ni ennïnė – anake – naḍapa*

he – I said – so – will act - he

1. a. *avën na:nï ennnanake naḍapa*

1. b. *na:nï ennïnanake avën naḍapa*

1. c. *na:nï ennïnė annane avën naḍapa*

He will act as I told

2. NP- S -Adv. effect-VP^2

eg. 1. *aven-paypi po:ci–accēki tindēti*

1. a. *avēn paypi po:paccēki tindēti*

1. b. *paypi po:paccēki avēn tindēti*

1. c. *paypi po:ci accēki aven tindēti*

He ate so much that his hunger would be appeased

8.1.45 $VP^2 \Rightarrow$ (Casal) VP^3

VP^2 is rewritten as casal plus VP^3, where casal is optional. VP^3 stands for the remaining part of the verb phrase Casal stands for all the casal constructions.

$$8.1.46. \quad \text{Casal} \Rightarrow \left\{\begin{matrix} \text{ACC} \\ \text{INST} \\ \text{SOCI} \\ \text{DAT} \\ \text{ABL} \\ \text{LOC} \\ \text{COMP} \\ \text{PURP} \end{matrix}\right\} (\text{Casal})$$

All the casal constructions are listed here except genitive (GEN). ACC stands for accusative, INST for instrumental SOCI for sociative, DAT for dative, ABL for ablative, LOC for locative, COMP for comparative and PURP for purposive. This is a recursive rule.

As already stated (§1.5), a simple sentence can have more than one casal construction but not of the same type. For instance,

* *na:ni avēna manena no:tine*

is an ungrammatical sentence whereas

na:nï avëna manelï no:ṭïnë

I saw him in the house

is a grammatical sentence. However there are certain instances where we find (in the surface level) one and the same case. There are many sentences which have locative case twice in a simple sentence.

eg. *avën maḍike:rili ka:le:jïlï o:duva*

He studies in a college at Mercara

The following examples show the combination of two cases in a sentence.

egs. 1. *avën na:ḍa ku:ḍe manekï ba:tï*

He came along with me to home

2. *ava avëna ka:le:jïlï no:ṭici*

She saw him in the college

3. *ayṅga manelï nï:ḍa ku:ḍe pa:ṭï pa:ḍïnë*

I sing a song with you at their house

etc.

8 1.47. $VP^4 \Rightarrow$ (Post.p) VP^5

Post.p stands for post position, which is expanded in the following rule.

8.1.48. $$\text{Post.P} \Rightarrow \left\{ \begin{array}{l} \text{Topic} \\ \text{Comp} \\ \text{Abl} \\ \text{Loc} \\ \text{Limit} \\ \text{Mann} \end{array} \right\} (\text{Post. P})$$

A post positional construction may be followed by another post positional construction. The post position which is given as an optional item enables us to get all possible sequence of post positional constructions, that can occur in a simple sentence.

Post positional phrase are listed here. They are topical (Topic), comparative (Comp), ablative (Abl), locative (Loc), limitative (Limit) and manneral (Mann). All these constructions are formed by adding the markers of the respective construction.

1. Topical

NP+N—Topic. M+VP'

eg. 1. *na:nï+ninna—kurïñ ji+ennïnë*

I+you(acc)-about+said.1

I told about you

2. Comparative

NP+N—Comp.M+VP'

eg. 1. *avèn+avaḷa—po:le+ca yluṇḍi*

he+she(acc)—like+(it) is beauty

He is as beautiful as her

3. Ablative

NP+N—Abl· M+VP'

eg. 1. *avèn+na:ḷe-toṭṭı+ma·ḍuva*

he + tomorrow-from + will do-he

He will do from tomorrow onwards

4. Locative

NP+N—Loc.M+VP^4

egs. 1. *pustaka+me:jira–me:le+undï*

book + table (Gen.) - on + is

The book is on the table

2. *pustaka + me:jira - mi:da + undï*

book + table (Gen.) on - is

The book is on the table

3. *aven + manera - olïlï + undï*

he + house (Gen.) - inside - is

He is into the house

5. Limitative

NP + N - Limit.M + VP^3

egs. 1. *ni:nï + kadal–o:la + po:ndï*

you + sea - till + must go

You must go upto ocean

2. *aven + idï - bare + ba.tï*

he + it - till + came-he

He came upto this (place)

6. Manneral

NP + N - Mann.M + VP^4

eg. 1. *na:nï + kann - a:re + kandï*

I + eye - fully + saw - I

I saw (fully) with my eyes.

§ 1 49. VP^2 → (ADV)Vb

VP^4 is rewritten here as adverb (ADV) plus verb (Vb) where the adverb is an optional item The adverbs are further classified in the following rules.

8.1.50. ADV $\Rightarrow \left\{\begin{matrix} ADV-1 \\ ADV-2 \end{matrix}\right\}$ (ADV)

ADV is rewritten into ADV - 1 and ADV - 2, which can be followed by another adverbs. The optional item (ADV) enables us to get as many adverds in a sentence as possible. ADV-1 stands for demonstrative adverbs and ADV - 2 for other pure adverbs, which *can be followed* by constituent sentence. Both can be further classified. (For examples see § 4)

8.1.51. ADV - $\Rightarrow \left\{\begin{matrix} Tm \\ Pc \\ Mr \\ Qy \end{matrix}\right\}$

ADV - I is rewritten into four kinds, viz., adverb of time (Tm), adverb of place (Pc), adverb of manner (Mr) and adverb *of quality* (*Qy*)· Adverb of time (Tm) can be further classified.

8.1.52. Tm $\Rightarrow \left\{\begin{matrix} Tm\ r \\ Tm.o \end{matrix}\right\}$

Adverb of time is divided into restricted adverb (Tm·r) and other adverbs (Tm.o)

1. Tm.r

egs,	*andi*	that day
	indi	*this day*

2. Tm.o

egs.	*akka*	then
	ikka	now

8 1.53. $ADV-2 \Rightarrow \begin{Bmatrix} Tm-1 \\ Pc-1 \\ Mr-1 \\ Qy-1 \end{Bmatrix}$

ADV - 2 is also classified into adverb of time, adverb of place, adverb of manner and adverb of quality. (For examples see § 4)

8.1.54. $Vb \Rightarrow \begin{Bmatrix} Vd \\ V \end{Bmatrix}$

Verb (Vb) is rewritten here as Vd and V. Vd stands for defective verbs like *ille* 'not' *uṇḍi* 'exist', *boːṇḍu* 'necessity' etc. (§ 2.5); and V for other verbs which include auxilary verbs and causative verbs. Though the auxilary and causative verbs can be derived from simple verbs, these are not treated here.

8.1.55. $V \Rightarrow \begin{Bmatrix} V+tr \\ Vtr \\ Vintr \end{Bmatrix}$

V is expanded as above, where V+tr stands for certain verbs which can take the transitive marker. Vtr for inherent transitive verbs and Vintr for inherent intransitive verbs. For detailed classification of these verbs see § 4.0.

8.1.56. $ADJ \Rightarrow \begin{Bmatrix} ADJap \\ ADJp \end{Bmatrix}$

Adjective is found as a sub class of verb phrase (rule 8.1.38) and is rewritten here as appellatives (ADJ^{ap}) and adjective proper (ADJ_p) because ADJ_{ap} is optionally preceded by intensifier and the other does not. Both can be further expanded.

8.1.57. $ADJ_{ap} \Rightarrow (Int) \left\{ \begin{matrix} Adj.s \\ Adj.d \end{matrix} \right\}$

ADJ_{ap} is rewritten as the intensifier (Int) plus a *simple adjective*(Adj.s) or a derived *adjective* (Adj.d.), where Int is an optional item.

1. (Int)+Adj.s+N

eg. 1. *tumba+nallë+mu:ḍi*

very - good - lady

Very good lady

2. *këṭṭë+mo:vën*

bad - son

Bad son

8.1.58. $Adj\ d \Rightarrow NIN_{com} + Adj._m$

Adj.d is rewritten as NIN_{con} (rule 8.1.22) plus adjective marker-*uḷḷë*

1. (Int)+NIN_{con} -- Adj_m +N

eg. 1. *tumba+ca:y-uḷḷë+mu:ḍi*

very+beauty-Adj+girl

Very beautiful girl

2. *pri:ti·yuḷḷë+mo:vën*

love-Adj_m +son

Loving son

Kodagu appellatives *nallë*, *këṭṭë*, *ca·yuḷḷë* etc., take the pronominal endings as *nallavën*, *këṭṭavën*, *ca:yuḷḷavën* etc., respectively and they are determined the subjects as,

1. *avën nallavën* He is a good man

2. *ivën këṭṭavën* Hei s a bad man

3. *ava ca:yuḷḷava* She is a beautiful lady.

This is taken care of by the concord transformation. And also in Kodagu *këṭṭë* 'bad', *o:diyë* 'educated' etc., seem to be relative participles, but they are really adjectives. All the relative participles do have some tense significance, but there is no tense significance in *këṭṭë*, *boḷitë* etc. Therefore these are treated as adjectives.

8.1.59. ADJ.p → { NUMB+ane / Adj.pf / Adj.p + N }

Adjective proper is expanded into number plus the ordinal marker *-ane*, adjective proper freeforms and adjective proper plus a noun. N is an obligatory item in the case of Adj. P+N.

1. NUMB+*ane*

egs.	*ond-ane*	first
	daṇḍ-ane	second
	mu:nd-ane	third
	etc.	

2. Adj.pf

egs.	*kirï*	small
	kirkë	-id-
	ciṇṇi	-id-
	boḷḷë	white
	naḍu	central
	etc.	

3. Adj+NP.

egs.	*ken-deṅge*	brown coconut
	kem-maṇṇï	red soil
	pom-baḍi	golden door
	ma:-de:vi	holy mother
	etc.	

8.1.60. GEN ⇒ N+Gen.M

Genitive is found as a sub-class of verb phrase (8.1.38.) and this construction is formed by adding the genitive marker (Gen. M) to nouns.

NP+N-Gen. M+Pt

egs. 1. *mane + na.-ḍa + dï*
house + I-Gen.M + Pt
The house is mine

2. *idï+ni:-ḍa+dï*
this + you-Gen. M + Pt
This is yours.

8.2. TRANSFORMATION

8.2.0. In Kodagu as in other natural languages we find simple, compound and complex sentences. Compound sentences are derived by conjoining two or more simple sentences whereas complex sentences are obtained by embedding one sentence into another in various ways. Together with these, various other transformations are applied and all these transformational rules are dealt with under this section though sketch only.

Relative clause and complementation can derived by embedding one sentence into noun phrase of another

sentence in a slightly different way. However only the relative clause construction is dealt in this section.

8.2.1. Relative Clause

There are various kinds of clauses in the sentences of any natural languages. Relative or adjectival clause is one among them and it is very common in many natural languages like English, Tamil, Kannada, Kodagu etc. Consider the following sentences

1. Eng. *The boy who I saw came here*
2. Ta. *na:n pa:rtta payyan vanta:n*
3. Kan. *na:nu no.ḍida huḍuganu bandanu*
4. Koḍ. *na nì no:ṭinè kinnë ba:ti*

We find that all sentences above have same meaning though they look different in the surface level. In English we find the relative pronoun *who* and in other examples we have the relative participle *pa:rtta*, *no:ḍida* and *no:ṭinè* which literaly mean '(one who) saw'

It is commonly know that how English relative clauses are formed. Actually sentence (1) is formed by combining the following two sentences.

1. (a) *The boy came here.*

1. (b) *I saw the boy.*

1. (b) is embedded into 1(a) directly after the noun "boy".

This will produce (5) which may not be a well formed sentence of English.

5. $\left[_{S^1}\right.$ *The boy* $\left[_{S^2}\right.$ *I saw the boy* $\left.\right]_{S^2}$ *came here* $\left.\right]_{S^1}$

In (1)the noun *the boy* is separated and in between them we find *I saw,* but the relative pronoun *who* is found to occur in (1) immediately after *the boy.* This necessiates that *the boy* in S^2 is moved and be placed immediately after *the boy* in S^1 and this operation will give (6)

6. *The boy the boy I saw came here*

in which relative pronoun transformation takes place and finally we get (1) ie.,

The boy who I saw came here.

With regard to sentences (2), (3) and (4). we can have the following as source sentences

2.(a) *na:n payyanai-p pa:rtte:n*

I saw the boy

(b) *payyan vanta:n*

The boy came

3.(a) *na:nu huḍugananu no:ḍide*

I saw the boy

(b) *huḍuganu bandanu*

The boy came

4.(a) *na:nī kīṇṇēna no:ṭīnē*

I saw the boy

(b) *kīṇṇē ba:tī*

The boy came

2(a), 3(a) and 4(a) are embedded into 2(b), 3(b) and 4(b) respectively in such a way that 2(a), 3(a) and 4(a) function as attributes to the nouns *payyan*, *huḍuganu*, *kiṇṇë* etc., and this will give the following.

7. $[_{S^1}\ [_{S^2}$ *na:n payyaṉai-p pa:rtte n* $]_{S^2}$ *payyan vanta:n* $]_{S^1}$

8. $[_{S^1}\ [_{S^2}$ *na:n huḍugenannu noḍidanu* $]_{S^2}$ *huḍuganu bandanu* $]_{S^1}$

9. $[_{S^1}\ [_{S^2}$ *na:nī kïṇṇëna no:ṭïnë* $]_{S^2}$ *kïṇṇë ba:të* $]_{S^1}$

Note that in Dravidian languages the constituent sentences are embedded in the left side of the identical noun in the matrix sentence. But in English constituent sentences are introduced in the right hand side and this does not make any difference and this is done only on the basis of surface structures of the sentences.

In the sentences (7), (8) and (9) Equi.NP deletion transformation; which deletes the identical noun in the constituent sentence takes place and finally we get the sentences (2), (3) and (4).

Thus when a sentence is embedded in a noun phrase, which contains another noun phrase the embedded sentence is converted into a relative clause. Both the noun phrase and the embedded sentences are dominated by another noun phrase.

As already pointed out in English the embedded sentence will be in the right side of the noun phrase (NP) of the matrix sentence whereas in Dravidian languages

like Tamil, Kannada and Kodagu the constituent sentence will be in the left side of the NP of the matrix sentence

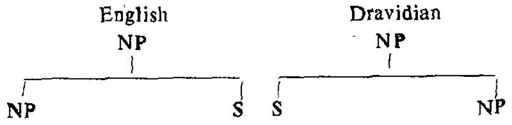

These constructions are called relative clauses. It is to be mentioned that a noun phrase of the embedded sentence is identical with the noun phrase of the matrix sentence. The key transformation in the generation of the surface structure of the relative clause transformation.

Many transformations are applied to get the surface structure, they are

(1) Equi-NP Deletion transformation

(2) Case deletion transformation

(3) Relativization transformation etc.,

If we consider the sentences (2), (3) and (4) as mentioned above, the identical NP in the constituent sentences (i.e in 2a and 2b, 3a and 3b, 4a and 4b) is deleted by applying the Equi-NP deletion transformation, then the case deletion transformation and relativization transformation take place.

Let us see the derivation of the sentence (2) by applying the above mentioned transformational rules.

1. *Equi-NP Deletion Transformation*

2(1) *na:n payyan*-Case.M *pa:r*-Aux *payyaṉ va*-

1 2 3 4 5 6 7

SD: NP + NP—Case-M + Vb.Aux + NP + V
1 2 3 4 5 6 7

SC: 1234567⇒ 134567, where 2 = 6

2. *Case suffix deletion Transformation*:

2(2) *na:n* Case-M *pa:r*-Aux *payyan̲* *va*
1 2 3 4 5 6

SD: NP + Case-M + Vb—Aux + NP + V
1 1 3 4 5 6

SC: 123456⇒ 13456

3. *Relativization Transformation*

2(3) *na:n* *pa:r*-Aux *payyan̲* *va*.
1 2 3 4 5

SD: NP + Vb + Aux + NP + V
1 2 4 5

SC: 12345⇒ 123 + Rel 45,

where the sequence 23 + Rel obtained through relativization transformation will be morphophonemically realised as *pa:rtta*. This is also true in the case of *no:ḍida* and *no:ṭinë* of the sentences (3) and (4) respectively.

The following diagram will show the above derivation of the sentence (2), (3) and (4).

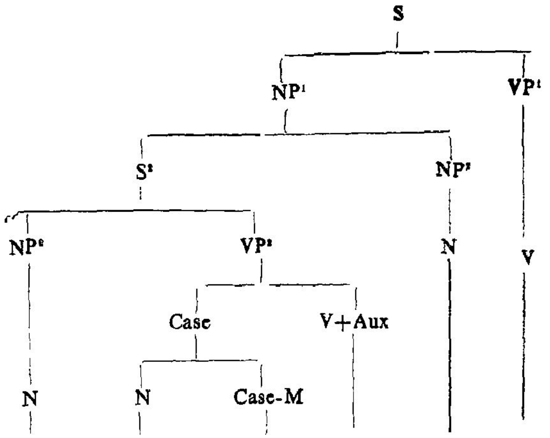

Ta.	*na:ṉ*	*payyaṉ*	*-aĩ-p*	*pa:rtte:ṉ*	*payyaṉ*	*vanta:ṉ*
Ka.	*na:nu*	*huḍugan*	*-annu*	*no:ḍidanu*	*huḍuganu*	*bandanu*
Kod.	*na:nï*	*kiṇṇė-*	*na*	*no:ṭīnė*	*kiṇṇė*	*ba:tï*

In English the Equi-NP deletion is not applied; instead the identical NP in the constituent sentence is replaced by the relative pronoun If the head noun is human the relative pronoun *who* is used and when it is non-human *which* is used, The relative pronoun *that* can be used for both. In addition to this *when, where, how* etc. are also used.

And also in English we find sentence like :

11. *People living in England are industrious.*
12. *The problems you raised are interesting.*

13. *I was present at the railway station when the train arrived*

14. *I know where he stays.*

These sentences can be derivable from the following

11 a. *People* who are *living in England are industrious*

12.a. *The problems* which *you raised are interesting.*

13 a. *I was present at the railway station* at the time *when the train arrived*

14.a. *I know* the place *where he stays*

These sentenses are different only in structure by having *who are*, the relative clause; *which*, the relative pronoun; *at the time*, the time noun and *the place*, the place noun. Since both sentences (11 and 11..a; 12 and 12a; 13 and 13a; 14 and 14a) are same in meaning, 11, 12, 13 and 14 can be derived from their corresponding other sentences. For this derivation many transformation like (2) Relative clause reduction, (1) Relative pronoun reduction, (3) Time and place noun deletion are applied.

The sentence (11) is derived from (11a) by applying the relative clause reduction transformation, where the relative *who are* in (11a) is reduced to get the sentence (11).

The sentence (12) is derived from (12 a) by applying the relative prononn reduction where the relative pronoun *which* is reducted to get the sentence (12)

The sentences (13) and (14) are derived from (13a) and (14a) respectively by applying the rules time and place deletion transformation Here the time noun *at the time* and the place noun *the place* are deleted and finally we get (13) and (14).

This is also found to be true in the case of Dravidian Languages, though it is not well noticed. Consider the following Tamil sentence,

15. *pattu araikaḷ koṇṭa vi:ṭu*

The house which has ten rooms

Here the past adjectival participle *koṇḍa* gives present tense meaning. It is true in the case of the following

16. *pattu araikaḷ irukkiṛa vi:ṭu*

The house which has ten rooms

When we compare (15) and (16) there is no meaning difference. Though the past adjectival participle in (15), it is equalent to (16). What is the reason for having the present tense meaning of the past relative participle. It will give an impression to take that the sentences (15) and (16) can be derivable from the following

17. *pattu araikaḷ koṇṭirukkiṛa vi:ṭu*

The house which has ten rooms

Now we can understand that (15) and (16) can be derived by deleting either the relative participle *irukkiṛa* or the past adverbial participle *koṇṭu*. When we delete the relative participle *irukkiṛa*, the relative participle marker *-a* is to be retained and joined with the adverbial participle *koṇṭu*. This takes care of by the suffix shift transformational rule. This is called relative participle deletion transformation. Because of the present relative participle *irukkiṛa*, the *koṇṭa* is being used in the same tense. If we delete the adverbial participle *koṇṭu* we will get (16). It will be taken into account by the adverbial participle deletion transformation.

But there is a difference in the case of Kodagu language. Consider the following

18. *patti ko·mbare uḷḷë mane*

The house which has ten rooms

It may be possible to derive (18) from (19).

19. *patti ko·mbare iñjituḷḷë mane*

The house which has ten rooms

Here the relative participle *uḷḷë* cannot be deleted and the adverbial participle *iñjiti* can alone be deleted,

And also in Tamil and Kodagu we find sentences like,

20. *na:n vanta piṉ va:* (Ta.)

21. *na:nï bandë piñña ba:* (Kod.)

(You) come after I came

Here we find that the relative participle *vanta/bandë* occur before the participle *piṉ/piñña*. The relative participle by definition is partly a verb because it has temporal reference and partly an adjective since it qualifies a noun (Kushalappa Gowda, 1972 : 424). It is also to be noted that relative participle is in construction with noun. But it is claimed by many (Karunakaran, 1970) that the relative participle can also be in construction with the participles like *piṉ*, *muṉ* etc. It seems that his description may be on the basis of surface level.

20. a. *na:n vanta ne:rattukkup pin va:* (Ta.)

21. a. *na:nï bandë në:raki piñña ba:* (Kod.)

(You) come after the time in which I came

When we compare these sentences with (20) and (21) we don't find any meaning difference in between (20) to (20.a) and (21) to (21.a). There is a possibility to derive (20) and (21) from the sentences (20.a) and (21.a) respectively. This derivation is taken care of by the time noun deletion transformation as shown in the case of English.

When the time expression occurs in the relative clause construction in Tamil or Kodagu it may be deleted in the surface level, but it becomes adverbial clause.

In Kodagu the phrase *bappëkï miñña* 'before the coming' can be derived from the relative clause as follows,

22. *avën bappëkï miñña ba·*

(You) come before he came

22.a. *avën bappë në:rakï miñña ba:*

(You) come before the time in which he came

Here the sentence (22) can also be derived from (22.a) by applying the time noun deletion transformation.

Notice that there are certain other constructions which look like relative clause. But they are not really modifiers of the noun. For instance,

23. *avan vanta ceyti* (Ta.)

24. *avën bandë suddi* (Kod.)

The news that he came

Here the sentences (23) and (24) can be equated with and derived from

23.a *avan vanta:n enra ceyti* (Ta.)

and

24.a *avën ba:tïndeṇṇuvë suddi* (Kod.)

respectively, where the constituent sentence is identified with the following noun.

The relative participle is derived from two sources. In the first case it comes from a pure verb and in the second it comes from an adjective.

25. *na:n paṭitta kaṭai* (Ta.)
na:ni o:diṇe kate (Kod.)
The story which I read

26. *nalla payyan* (Ta.)
nalle kiṇṇe (Kod.)
Good boy

In the sentence (25) the relative participle *paṭittal o:diṇé* is derived from verb and in the sentence (26) the adjective *nalla/nallé* is derived from adjective, both of them are grouped under VERB. In the case of sentences (23) and (24) it is not possible to derive *vanta* and *bande* in the same way as we derived *paṭitta/o:diṇé* and *nalla/nalle*. The relationship between *vanta* and *ceyti* is different from that of *paṭitta* and *kaṭai*.

It is also known (Smith.1969, Jesperson: 1964) that there are two types of relative clause viz. (1) restrictive relative clause and (2) non-restrictive relative clause A relative clause is restrictive when it makes the head noun specific and it is natural that NP's which are already specified cannot be made specific by a relative clause. A non - restrictive relative clause is the only kind that can be formed by proper nouns as well as unique nouns because they are already specific. For example in English

27: *John, who is professor of Linguistics is my cousin.*

28. *The sun, which rises in the east is a planet.*

29. *The moon, which we see now is a planet.*

But this is not the case with other nouns which can take other type of relative clause. Consider the following:

30. Eng. *The boy who I know is good.*

31. Ta. *eṉakku-t terinta payyaṉ nallavaṉ.*

32. Kod. *na:ki gottuḷḷë kiṇṇë nallavën.*

These relative clauses are considered as restrictive clauses. It is to be noted that in English the diffrence between restrictive relative clause and non-restrictive relative clause is marked by putting comas as follows

(a) The chinese, who are industrious, will improve.

(b) The boy, who(m) I saw, is good

and in speech intonation will take care of the difference When we examine (31) and (32) it is difficult to find such clear cut difference. In a context, when there are more than one boy is present we can use the sentence (31 . Then it will be a restrictive clause since it specifies a particular boy who is known to me. But the same sentence can also be used when there is only one boy. Then the relative clause is used as a restrictive one, since the question of identification does not arise. The same situation is found in Kodagu also

Another proposal that restrictive relative clauses are conjoined sentences in deep structure has been made in various forms (Annear: 1971, Postal: 1970. Ross: 1967; Bach: 1968). By supporting this proposal Oh (1971) proposes that the relative clauses are derived from underlying conjunctions. But in this present analysis I have

followed the same that the relative participles are derived from the following underlying structure

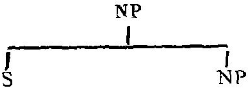

Like in many other natural languages, in Kodagu also we find various kinds of relationship between the head noun and the verb in the relative clause. For example in expressions like *bandė kiṇṇė* 'the boy who came', we find the subject-predicate relation, i e., we know from the expression that a boy has come and the particular boy is mentioned in the phrase.

In Kodagu sentences we find very many casal relations between the verb predicate and the noun phrases. The casal relations are very important in this language and the present study restricts itself only to those relations in this chapter.

10. 2. 1. 1. Subject-predicate relation

In Kodagu we find noun phrases like,

1 *illikï bandė kiṇṇė*	the boy who came here
2 *o:ḍinë kiṇṇė*	the boy who ran
3 *buddė kiṇṇė*	the boy who fell down

etc. In all these noun-phrases we find that the noun *kiṇṇė* and the verbs (in the form of relative participle) are in the subject-predicate relation. Though the noun *kiṇṇe* in the above expression are not used as the subject of the verb (as in sentences like *kiṇṇe illikï ba:ṭï* 'the boy came here') we intutively feel that the boy we speak of came. To bring out this semantic relation it becomes

necessary to derive the above phrases from the structures like

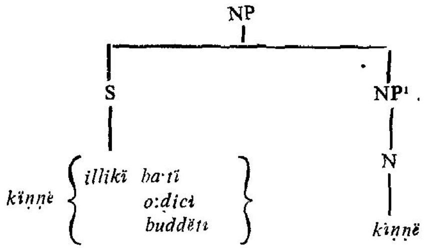

In the constituent sentences, *kïṇṇë illikï ba:ti*, *kïṇṇë o:ḍici* and *kïṇṇë buddëti* we clearly see the subject-predicate relation.

The above underlying structure undergoes various transformation as mentioned earlier.

1. Equi- NP deletion

Note that the noun in the matrix sentence, i. e., *kïṇṇë* and the noun (*kiṇṇe*) in the constituent sentence are identical and therefore Equi-NP deletion takes place.

# *kïṇṇë*	*illikï*	*ba·ti* #	*kiṇṇë*
1	2	3	4

# *illiki*	*ba:tï* #	*kïṇṇe*
2	3	4

2 Relativization transformation

This transformational rule transforms the verb into a relative participle and hence it is named relativization transformation.

# *illikï*	*ba:ṭï*	# *kiṇṇë*	⇒	# *illikï*	*ba:ṭï*+RP	#	*kiṇṇë*
1	2	3		1	2+RP		3

After applying the relevant morphophonemic rule we get the noun-phrase *illikï bandë kiṇṇë* 'the boy who came here'.

As a result of the above transformation rules we get the resultant phrases as

1 *illikï bandë kiṇṇë* the boy who came here

2 *o:ḍïnë kiṇṇë* the boy who ran

3 *buddë kiṇṇe* the boy who fell down

This kind of deep structure and the transformations explain the semantic relation that we find between the noun and the relative participle in the above noun phrases. The relationship that we find in the constituent structure is maintained in the noun phrase which is actually derived from the sentence.

The diagram (No. 1, 2, & 3) will clearly show the derivation of the above phrases

Diagram No. 1

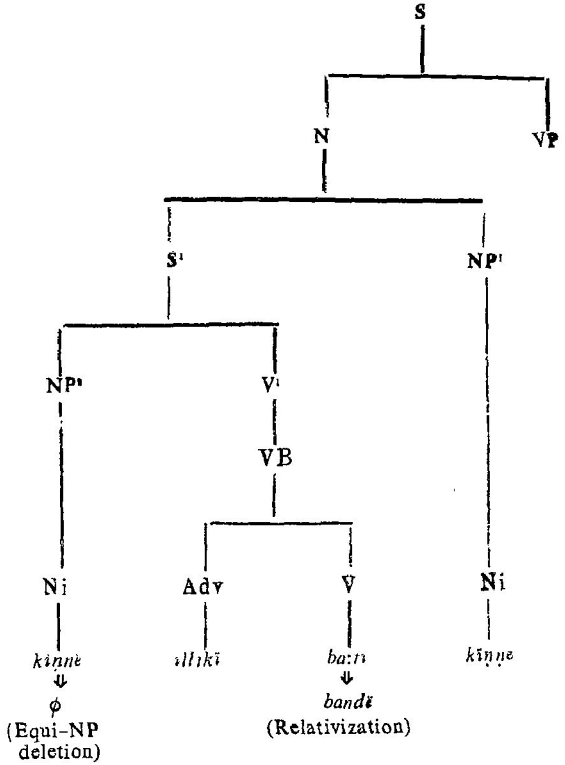
S
N
VP
S'
NP'
NP'
V'
VB
Ni
Adv
V
Ni
kiṇṇe
ϕ
(Equi-NP deletion)
bandi
(Relativization)
kiṇṇe

Diagram No. 2

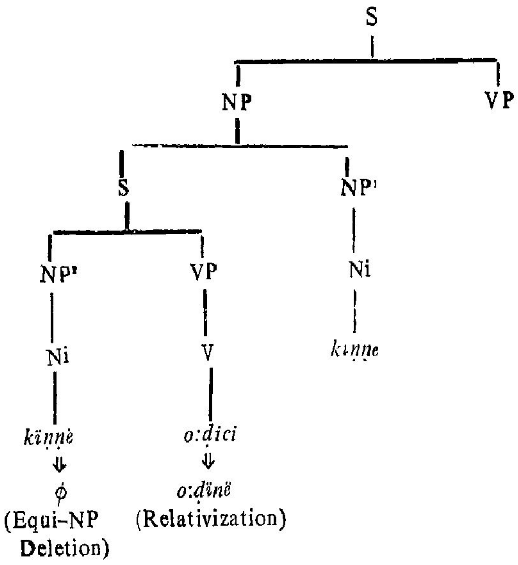
S
NP
VP
S
NP'
NP'
VP
Ni
Ni
V
kịṇṇe
kïṇṇė
o:ḍici
⇓
⇓
ϕ
o:ḍinë
(Equi-NP Deletion)
(Relativization)

Diagram No. 3

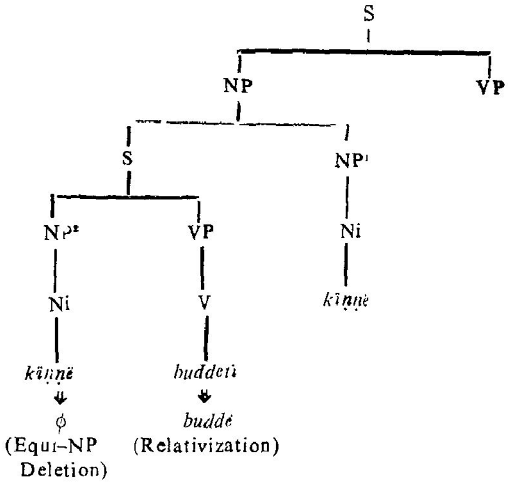

10. 2. 1. 2. Object-predicate relation

In Kodagu we find noun phrases like

1 *aven o:dïne kate* the story which he read

2 *avėn eḷidinė kate* the story which he wrote

In the above noun phrases the relative participles *(o dinë, elidïnė)* and the head noun *(kate)* exibit object-predicate relation. The noun *kate* in the above expressions are not used as the object of the above verb (as in sentences

like *avën kate o:dici* 'he read the story.' Therefore the the above phrases are derived from the structures like

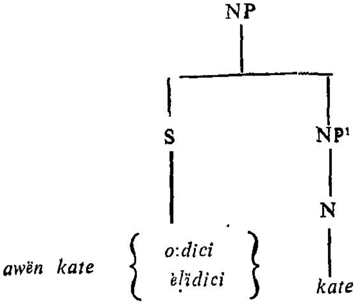

The following transformation rules account for the above semantic relation that we find between the noun and the verb in the phrase.

1 Equi-NP deletion.

Here the noun *kate* in the matrix sentence and in the constituent sentence are identical and therefore Equi-NP deletion takes place.

\# *aven kate* + Case-M *o:dici* # *kate* ⇒
1 2 3 4 5

\# *avën* Case-M *o:dici* # *kate*
1 3 4 5

2. Case deletion transformation.

After applying the Equi-NP deletion transformation the case looses its significance and therefore case deletion transformation takes place.

avėn Case-M *o:dici* # *kate* ⇒
1 2 3 4

avën o:dici # *kate*
1 3 4

3. Relativization transformation.

This transformation rule transforms the verb of the constituent sentence into a relative participle.

aven o:dici # *kate* ⇒ # *aven o:dine* # *kate*
1 2 3 1 2+Rel 3

It is to be noted that only after applying the relevant morphophonemic rules (which I do not deal with here) the noun phrase *avėn o·dine kate* will be obtained.

The following diagram (No. 4 of page No. 302) will clearly show the derivation of the above phrase.

Diagram No. 4

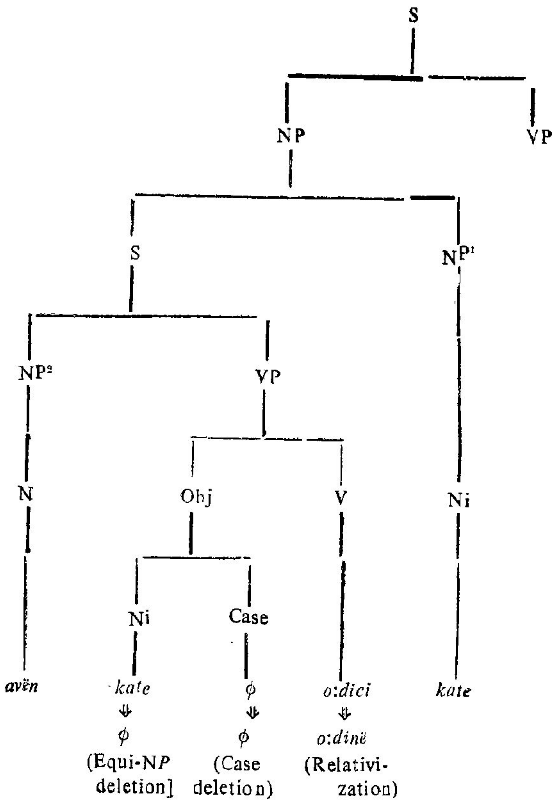
S
NP
VP
S
NP¹
NP²
VP
N
Obj
V
Ni
Ni
Case
avën
kate
ϕ
o:dici
kate
ϕ
ϕ
o:dinë
(Equi-NP deletion]
(Case deletion)
(Relativi-zation)

10·2.1.3. Instrument – predicate relation

In Kodagu we find noun phrases like

1. *avën kettïnë katti* the knife with which (some one) cut

2. *avën kuttïnë katti* the kinfe with which (some one) stabed

In the above noun phrases the relative participles (*kettinë, kuttinë*) and the head noun (*katti*) stand in instrument – predicate relation. The noun *katti* in the above expressions are not used as the instrumental of the above verb (as in sentences like *avën kattinoṇḍï kettici* 'he cut with knife'). Therefore the above phrases are derived from the structures like

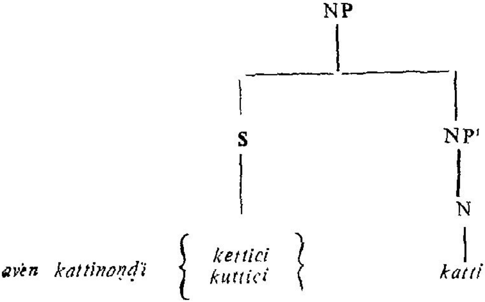

The transformation rules, involved for the above semantic relation are the following

1 Equi-NP deletion

The noun *katti* in the matrix sentence and in the constituent sentence are identical and therefore Equi-NP deletion takes place

1 # *aven* *katti* + Case-M *kettici* # *katti*
1 2 3 4 5 ⇒

avèn Case+M *kettici* # *katti*
1 3 4 5

2 # *aven* *katti* + Case+M *kuttici* # *katti*
1 2 3 4 5 ⇒

avën Case-M *kuttici* # *katti*
1 3 4 5

2 Case deletion transformation.

After deleting the noun (*katti*) in the constituent sentence the Case-M is being isolated and therefore the case deletion transformation takes place.

1 # *aven* Case-M *kettici* # *katti*
1 2 3. 4 ⇒

aven *kettici* # *katti*
1 3 4

2 # *aven* Case-M *kuttici* # *katti*
1 2 3 4 ⇒

avèn *kuttici* # *katti*
1 3 4

3. Relativization transformation

Here this transformation rule transforms the verbs *kettici* / *kuttici* of the constituent sentences into relative participles as *kettinė* and *kuttine* respectively.

1 # *aven* *kettici* # *katti* ⇒ # *avèn* *kettine* # *katti*
1 2 3 1 2+Rel 3

2 # *avèn* *kuttici* # *katti* ⇒ # *avèn* *kuttinė* # *katti*
1 2 3 1 2+Rel 3

The diagram No. 5 & 6 of page No. 305 & 306 will clearly show the derivation of the above phrases.

Diagram No. 5

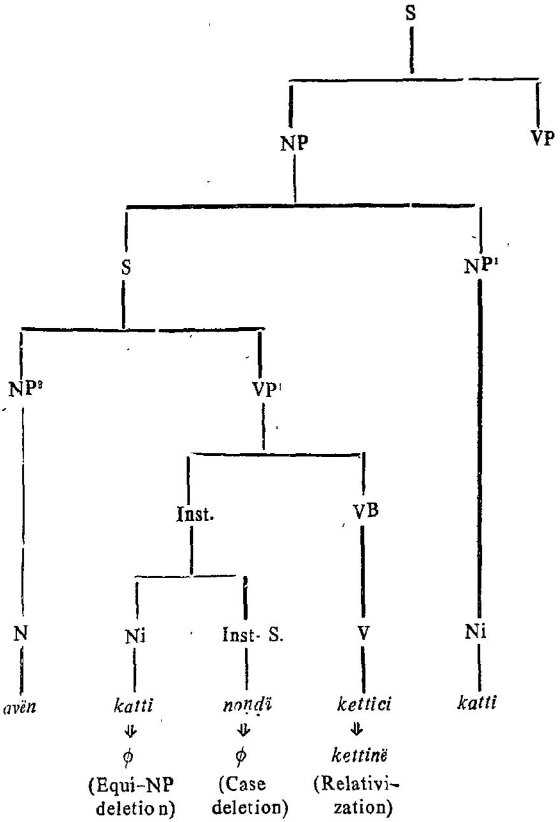
S
NP
VP
S
NP¹
NP²
VP¹
Inst.
VB
N
Ni
Inst- S.
V
Ni
avën
katti
nondï
kettici
katti
ϕ
ϕ
kettinë
(Equi-NP deletion)
(Case deletion)
(Relativization)

Diagram No. 5

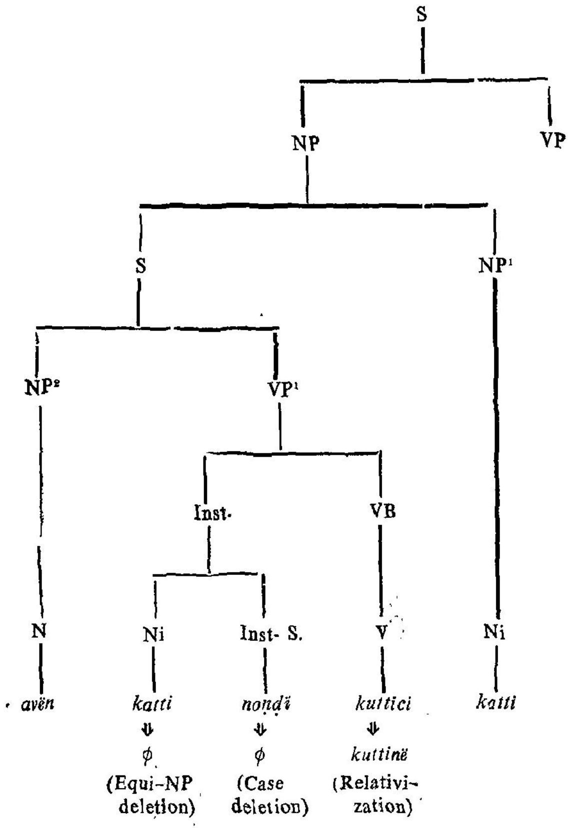
S
NP
VP
S
NP1
NP2
VP1
Inst.
VB
N
Ni
Inst- S.
V
Ni
avën
katti
nondï
kuttici
katti
ϕ
ϕ
kuttinë
(Equi-NP deletion)
(Case deletion)
(Relativization)

8. 2. 1. 4. Dative-predicate relation

In Kodagu we find noun phrase like

1. *na:nï po:në ka:ḍï* 'the forest where I went'. Here the relative participle *po:në* and head noun *ka:ḍï* stand in dative-predicate relation. The noun *ka:ḍï* in the above expression is not used as dative of the above verb (as in sentences like *na:nï ka:ḍïkï po:në* 'I went to forest'). Therefore the above phrase is derived from the structures like

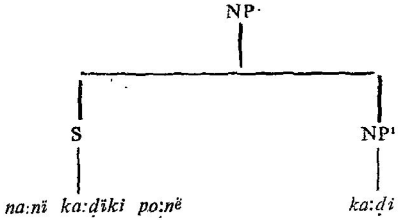

The transformation rules, involved for the above sementic relation are the following

1. Equi-NP deletion

The noun *ka:ḍï* in the constituent sentence and in the matrix sentence are identical and therefore Equi-NP deletion takes place.

na:nï *ka·ḍi* + Case-M *po:në* # *ka:ḍï* →
1 2 3 4 5

na·nï Case-M *po:në* # *ka:ḍï*

2. Case deletion transformation

Here the case marker is being isolated since the Equi-NP deletion has taken place and therefore case deletion takes place

na:nï Cass–M *po:në* # *ka:ḍi* ⇒
1 2 3 4

na:nï po:në # *ka:ḍï*
1 3 4

3. Relativization transformation.

This transformation rule transforms the verb *po:në* in the constituent sentence into relative participle as *po:në*. It is worth mentioning that the fintit verb *po:në* '(I) went' and the relative participle *po:në* are in identical phonemic shape.

na:ni po:në # *ka:ḍi:* ⇒ # *na:ni po:në* # *ka:ḍï*
1 2 3 1 2+RP 3

As a result of the above transformation rules we get the resultant phrase as

na:nï po:në ka:ḍï The forest where I went.

The following diagram will clearly show the derivation of the above phrase.

Diagram No. 7

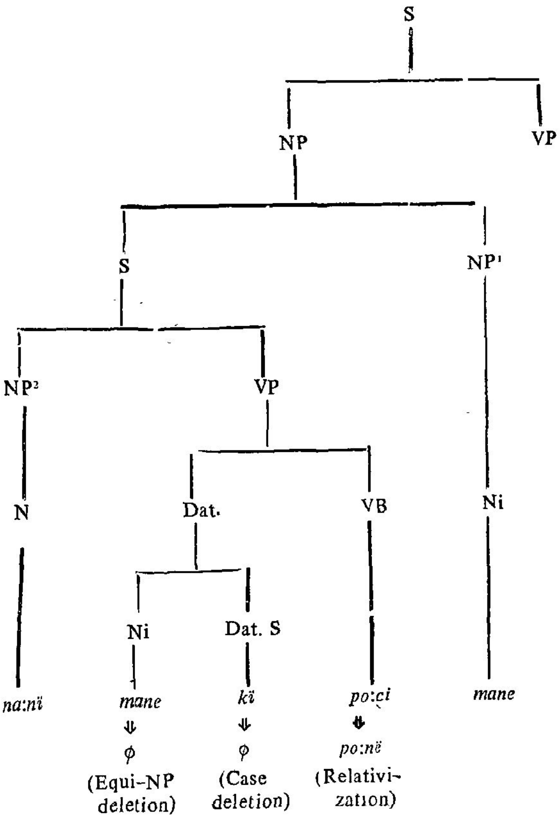
S
NP
VP
S
NP¹
NP²
VP
N
Dat.
VB
Ni
Ni
Dat. S
na:nï
mane
kï
po:ci
mane
⇓
⇓
⇓
φ
φ
po:në
(Equi-NP deletion)
(Case deletion)
(Relativization)

8 2.1.5. Ablative-predicate relation.

In Kodagu we find noun phrases like

1. *avën buddë mara* 'the tree from where he fell down' In the above noun phrase the relative participle (*buddë*) and the head noun (*mara*) stand in ablative - predicate relation. The noun *mara* is not used as the ablative of the above verb (as in sentences like *avën maratiñji buddëti* 'he fell down from the tree'). Therefore the above phrase is derived from the following structure

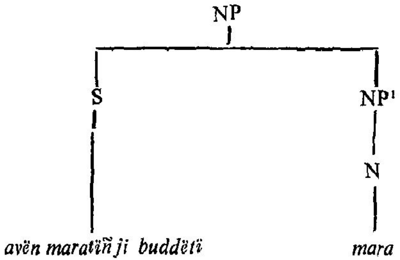

The transformation rules involved for the above semantic relation are the following

1. Equi-NP deletion

Here the noun *mara* in the constituent as well as the matrix sentences are identical and therefore Equi-NP deletion takes place.

# *avën*	*mara* +	Case-M	*buddëtï* #	*mara*	⇒
1	2	3	4	5	

avën	Case-M	*buddëtï* #	*mara*
1	3	4	5

2 Case deletion transformation

Here this transformation takes place only because of the deletion of the noun in the constituent sentence.

# *avën*	Case-M	*buddëtï* #	*mara*	⇒
1	2	3	4	

# *avën*	*buddëtï* #	*mara*
1	2	4

3. Relativization transformation

This transformation rule transforms the verb (*buddëtï*) of constituent sentence into a relative participle (*buddë*)

# *avën*	*buddëtï*	# *mara*	⇒	# *avën*	*buddë*	# *mara*
1	2	3		1	2-RP	3

The following diagram will clearly show the derivation of the above phrase

Diagram No. 8

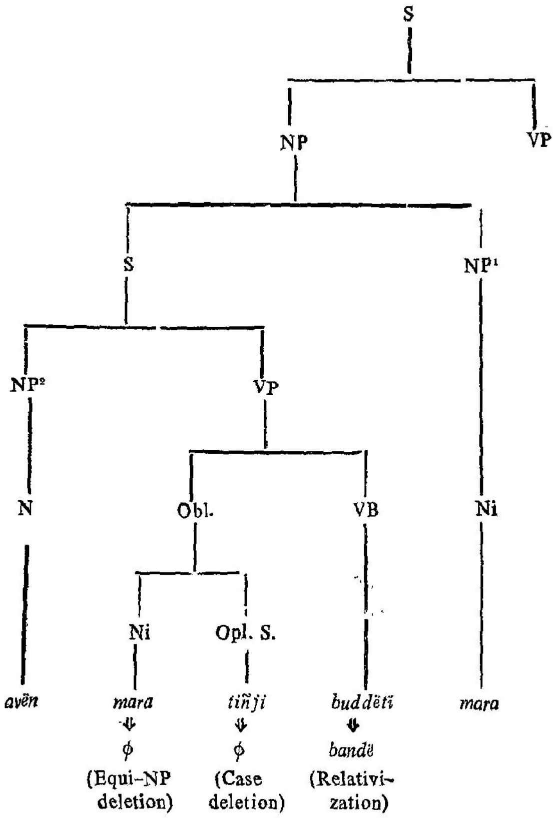
S
NP
VP
S
NP¹
NP²
VP
N
Obl.
VB
Ni
Ni
Opl. S.
avẽn
mara
ϕ
(Equi-NP deletion)
tiñji
ϕ
(Case deletion)
buddẽti
bandẽ
(Relativization)
mara

8. 2. 1. 6. Locative predicate relation

In Kodagu we find the noun phrases like *ayṅga uḷḷë mane* 'the house in which they are'. In the above phrase the relative participle *uḷḷë* and the head noun *mane* stand in locative predicate relation. The noun *mane* 'housè' in 'the above expression is not used as the locative the above verb (as in sentences like *ayṅga manelï uṇḍï* 'they are in the house'). Therefore the above phrase is derived from the structures like

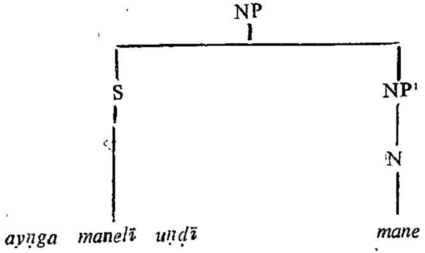

The following transformation rules account for the above semantic relation.

1. Equi-NP deletion

Here the noun *mane* in the matrix sentence and in the constituent sentence are identical and therefore this ransformation rule takes place.

# *ayṅga*	*mane*	+	Case-M	*uṇḍï* #	*mane*	⇒
1	2		3	4	5	

# *ayṅga*	Case-M	*uṇḍï*	# *mane*
1	3	4	5

2. Case deletion transformation

As the Equi-NP deletion takes plaee the case marker loose its significance and therefore this transformation takes place.

# *ayṅga*	Case-M	*uṇḍï*	# *mane*	⇒
1	2	3	4	

# *ayṅga*	*uṇḍï*	# *mane*
1	3	4

3. Relativization transformation.

This transformation rule transforms the verb (*uṇḍï*) of constituent sentence into a relative participle (*uḷḷë*).

# *ayṅga*	*uṇḍï*	# *mane*	⇒	*ayṅga*	*uḷḷë*	# *mane*
1	2	3		1	2 + RP	3

The following diagram will clearly show the derivation of the above phrase.

Diagram No. 9

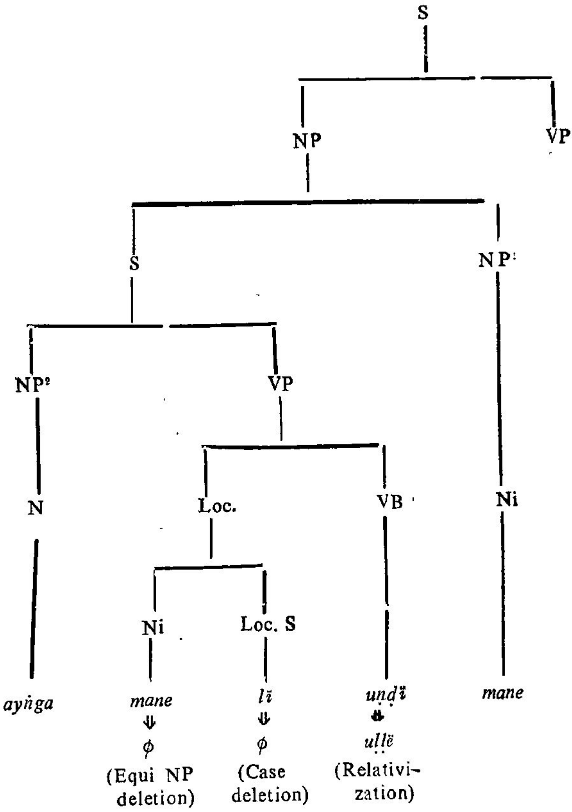
S
NP
VP
S
NP
NP
VP
N
Loc.
VB
Ni
Ni
Loc. S
ayṅga
mane
⇓
φ
(Equi NP deletion)
lĭ
⇓
φ
(Case deletion)
uṇḍĭ
⇓
uḷḷĕ
(Relativization)
mane

8.2.1.7 Purposive-predicate relation

In Kodagu we find new phrases like

avèn bandè ka:riya 'the matter for which he came.'

Here the relative participle *bande* and the head noun *ka:riya* are in purposive predicate relation. The noun *ka:riya* in the above phrase is not used as the purposive of the verb *bandë* (as in sentences like *avën ka:riyaka·ytï ba:ti* 'he came for some matter'). Therefore the above noun phrase is derived from the structures like

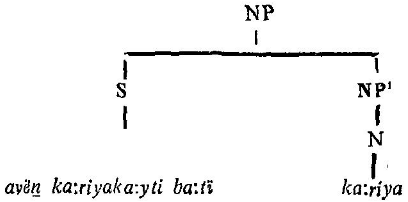

The following transformation rule account for the above semantic relation

1. Equi-NP deletion

Here the noun *ka:riya* in the matrix sentence and in the constituent sentence are identical and therefore this transformation takes place.

# *avën*	*ka:riya*	+ Case–M	*ba:tĩ*	# *ka:riya*	⇒
1	2	3	4	5	

#*avën*	Case–M	*ba:tĩ*	# *ka:riya*
1	3	4	5

2. Case deletion transformation

After applying the Equi-NP deletion transformation the case marker looses its significance and therefore this case deletion transformation takes place

#*avën*	Case–M	*ba:tĩ*	# *ka:riya*	⇒
1	2	3	4	

#*avën*	*ba:tĩ*	# *ka:riya*
1	3	4

3. Relativization transformation

This transformation transforms the verb (*ba:tĩ*) in the constituent sentence into relative participle.

# *avën*	*ba:tĩ*	# *ka:riya*	⇒	*avën*	*bandë*	# *ka:riya*
1	2	3		1	2+RP	3

As a result of the above transformation rules we get the noun phrase

avën bandë ka:riya 'the matter for which he came.'

The following diagram will show the derivation of he above phrase

Diagram No. 10

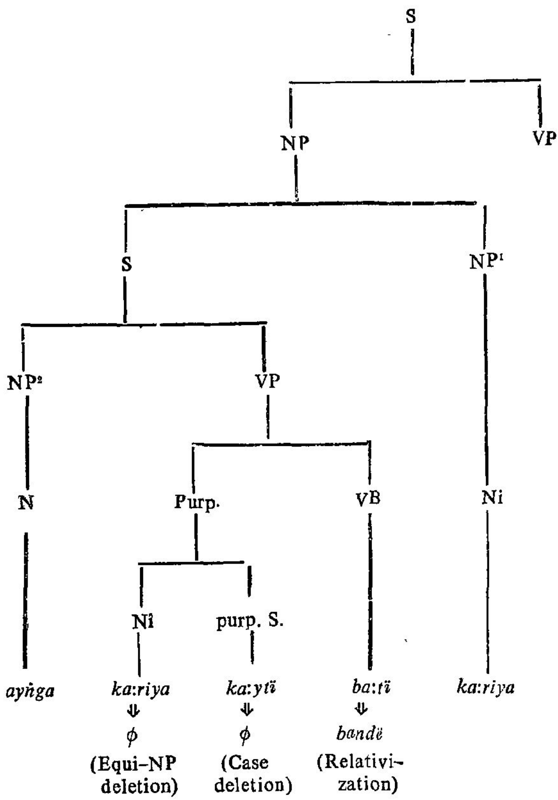

8.2.1.8. Cognate object-predicate relation

Object-predicate relation has adready been explained. But there are certain other relative noun phrases, whose relative participles and the heads are found in cognate object-predicate relation.

In Kodagu we find noun phrases like

1. *avën a:ḍïnë a:ṭï* 'the dance that (some body) danced'

2. *avën tëḷicë tëḷipi* 'the laugh that (some body) laughed'

etc. In these noun phrases we find that the nouns *a:ṭï*, *teḷipï* etc., and the verbs (in the form of relative participles) *a:dïnë*, *tëḷicë* etc are in cognate object-predicate relation. To bring out this semantic relation it becomes necessary to drive the above phrases from the structures like

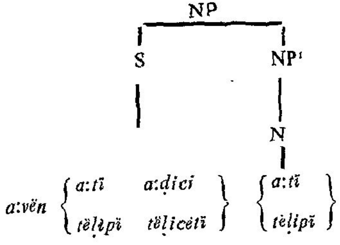

The above underlying structures undergo various transformation as mentioned in the object-predicate relation.

1. Equi-NP deletion

Here the nouns in the matrix sentence, i, e, *a:ṭï* and *tëlipï* and the nouns in the constituent sentence (*a:ṭï* and *tëlipï*) are identical and therefore this transfor mation takes place.

1. # *avën a:ṭï* + Case-M *a:ḍici* # *a:ṭï* ⇒
   1 2 3 4 5
   # *avën* Case-M *a:ḍici* # *a:ṭï*
   1 3 4 5

2. # *avën tëlipï* + Case-M *tëlicëtï* # *tëlipï* ⇒
   1 2 3 4 5
   # *avën* Case-M *tëlicëtï* # *tëlipï*
   1 3 4 5

2. Case deletion transformation

After applying the Equi-NP deletion transformation the Case-M loose its significance and therefore this trans formation takes place. It is to be noted here that the Case-M is optional.

avën Case-M *a:ḍici* # *a:ṭï* ⇒ # *avën a:ḍici* # *a:ṭï*
1 2 3 4 1 3 4

2. # *avën* Case-M *tëlicëtï* # *tëlipï* ⇒
   1 2 3 4
   # *avën tëlicëtï* # *tëlipï*
   1 3 4

3. Relativization transformation

This rule transforms the verbs of constituent sentence into relative participle.

1. # *avën a:ḍici* # *a:ṭï* ⇒ *avën a:ḍïnë a:ṭï*
   1 2 3 1 2+RP 3 :

2. # *avën tëlicëtï* # *tëlipï* ⇒ *avën tëlicë* # *tëlipi*
   1 2 3 1 2+RP 3

The following diagrams will clearly show the derivation of the above phrases

Diagram No. 11

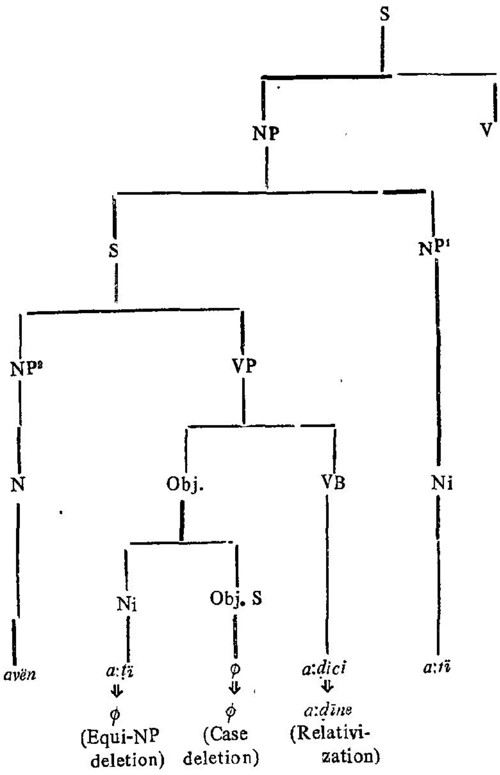

Diagram No. 12

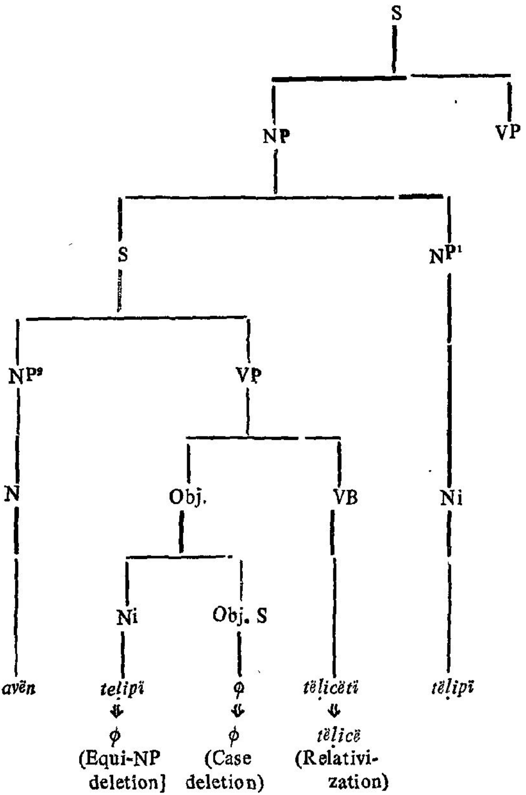

9. BIBLIOGRAPHY

Agesthialingom, S. 1964. "Auxiliary verbs in Tamil" *Tamil Culture* XI, 3., 272–79.

———— 1967. *A Generative Grammar of Tamil* (A fragment of Tamil syntax), Annamalai University, Annamalainagar.

———— 1969. "Transitive and Intransitive verbs", *All India Oriental Conference*, XXV Session, Jadavpur, Calcutta.

———— 1969 "Infinitive in Tamil", *First All India University Tamil Teachers Conference*, Madurai.

———— 1971. "Modality in Tamil" *Second All India Conference of Linguists*, Delhi,

———— 1972. "Instrumental in Dravidian", *The Third All India Conference of Linguists*, Hyderabad.

Agesthialingom, S and Balakrishnan, R 1971. "Kodagu Phonology" *Journal of the Annamalai University* (Humanities) Vol XXVIII, 73–92

Agesthialingom, S and Shanmugam, S.V. 1970. *The Language of Tamil Inscriptions* (1250-1350 A. D.) Annamalai University, Annamalainagar.

Agesthialingom, S. and Shanmugam, S.V. 1972. (Eds.) *Third Seminar on Dravidian Linguistics*, Annamalai University, Annamalainagar.

Andronove, M. 1965. *The Tamil Language*, Nauka, Moscow.

———— 1969. *The Kannada Language*, Nauka, Moscow

———— 1969. *The Standard Grammar of Modern and Classical Tamil*, Madras.

Annear Thompson, Sandra 1971 "The deep structure of Relative Clause" in Fillmore and Langendoen (*1971*) 78–94.

Appayya, K. 1902. *KoḍagaraKulācāradi* (in Kannada) Mysore.

Arden, A. H. 1954. *A Progressive Grammar of Common Tamil*, Madras.

Balakrishnan, R. 1976. *Phonology of Kodagu with Vocabulary*, Annamalainagar.

Bach, Emmon, 1968. "Nouns and Noun phrases" in Bach and Harms (1968) 90-122.

Beschi, S. J. 1848. *A Grammar of the Common Dialect of Tamil Language*, Madras.

Batt, D. N. S. 1967. *Descriptive Analysis of Tulu*, Poona.

Bhattacharya, S. 1957. *Ollari - A Dravidian speech*, Anthropological Survey of India.

Bhattacharya, S. and Burrow, T. 1953. *The Parji Language*, Hertford, England.

———— 1970. *The Pengo Language*, Oxford.

Bright, W. 1960. "A Study of caste and dialect in Mysore", *Indian Linguistics*, 21, 45–50.

Burrow, T. 1968. *Collected papers on Dravidian Linguistics*, Annamalai University, Annamalainagar.

Burrow, T. and Emenau, M. B. 1961. *A Dravidian Etymological Dictionary* (DED), Oxford.

——— 1968. *A Dravidian Etymological ictionary Supplement* (DEDS), Oxford.

Caldwell, R. 1956. *A Comparative grammar of the Dravidian or South-Indian family of Languages* (3rd ed. Revised and edited by the Rev. J. L. Wyatt and T. Ramakrishna Pillai), Madras.

Cole, R. H. 1861. *Mannual of Coorg law*, Bangalore

——— 1867. *An Elementary Grammar of the Coorg Language*, Bangalore.

Connor, Lt. 1870. *Memoir of the Codagu survey*, Parts I and II, Bangalore.

Chinnappa, N. 1924. *Paṭṭo:le paḷame* (Partly in Kodagu language and partly in Kannada), Bangalore

Ellis, W. F. 1886 "Note to the introduction" of A D. Campell. *A Grammar of Telugu language*, Madras.

Emeneau, M. B. 1970. *Dravidian Comparative Phonology A sketch*, Annamalai University, Annamalainagar.

——— 1970 "Kodagu Vowels", *Journal of the American Oriental Society*, 90 145–58.

——— 1971. Kodagu and Brahui development of PD.r* *Indo-Iranian journal* 13:3. 276. 98·

Ganapathy, B. D. 1967. " *Kodavas (Coorgs) – their, customs and culture*, Kodagu Ltd. Mercara.

——— 1970. *Side – lights on Kodava culture*, Kodagu Ltd., Mercara

——— 1972. *Kuttimbolica* (Kodogu Drama in Kannada script), Kodagu Ltd., Mercara.

Garman, M. A. 1973. *A Grammar of the Coorg Language* Ph. D. Thesis, University of Edinburgh.

Craeter, A. 1870. *Coorg songs with outline of Coorg Grammar*, Bangalore

Haradas Appocha 1968. *Appaca Kavi's Na·lk na:ṭaka* (Kodagu dramas in Kannada script), Mercara.

Holland, T. 1901 *Coorgs and Yeravas*, JRAS (Bengal) Vol. IXX Ph. III.

Jesperson, Otto 1964. *Selected writings*, Tokyo, Senjo publishing co.,

Kanty, B. G. 1931. *Coorg and its rulers*, thesis submitted for M. A. Bombay University

Kamaleswaran, K. S. 1974. *Nouns in Tamil*, Ph. D. thesi, submitted to the Annamalai University, Annamalainagar

Karunakaran, K. 1969. *A Descriptive Grammar of the Dialect of the Kollimalai Tribe*, Ph. D. Dissertation, Annamalai University

Kothandaraman, P. 1969. *A Contrastive analysis of Tamil and Telugu* [A transformationa, approach] Ph. D. Dissertationl Annamalai University.

——— 1969. "Kodagu Vowels" *In Dravidian Linguistics* (Seminar papers), (Eds.) S. Agesthialingom and Kumarasawami Raja, 233–47, Annamalai University, Annamalainagar.

Kothandaraman R. 1973. *A Generative Grammar of Modern Literary Tamil*, ph. D. Dissertation, Annamalai University.

Krishnamurti, Bh. 1969. *Konda or Kubi - A Dravidian Language*, Hyderabad.

Kumaraswami Raja, N. 1969. *Post-Nasal Voiceless Plosives in Dravidian* Annamalai University Annamalainagar.

Kusaladpa Gowda, K. 1970. *Gowda Kannada*, Annamalai University, Annamalainagar.

——— 1972. *A Grammar of Kannada* (based on the Inscription of Coorg, South Kanara and North Kanara Districts 1000 to 1400 A. D.), Annamalai University, Annamalainagar

Lakoff G. 1970. *Irregularity in Syntax*, New York

Lisker, L. 1956. " Tamil verb classification ", *Journal of American Oriental Society*, 7 : 11-14.

Lazarus, John 1878. *A Tamil Grammar for use in colleges*, Madras

Mandelbaum, D. G. 1941. "Culture change among the Nilgiri tribes", *American Anthropologist*, 43.

Moegling, H. 1855. *Coorg Memoire*, Bangalore.

Muthanna, P. M. 1931. *Coorg and Coorgs*, Siddapur, Coorg

Oh Choon-Kyu. 1971. "Aspects of Korean Syntax", *Working papers in Linguistics*, Vol. III, Honolulu.

Pope, G. U. 1937. *A first Catechism of Tamil Grammar*, Madras.

Postal, Paul, M. 1970 *Cross-over Phenomena*, New York

Ramaswami Aiyer, L.V. 1926 "Affinities of Dravidian families of languages" *Educational review*, 32, 737-41., Madras.

——— 1936. *The evolution of Malayalam Morphology*, Ernakulam.

Rhenius, C.T.E. 1883. *A Grammar of the Tamil Language* Madras (4th Edn.)

Rice, L. 1886. *Coorg Inscriptions*, Bangalore.

Richards, G. 1870. *Manual of Coorg*, a Gazetteer, Bangalore.

Ross, John, R. 1967. *Constraints on variables in Syntax* Bloomington, Indiana University Linguistics, club.

Sakthivel, S. 1974. *A descriptive study of Toda Language*, ph. D Thesis Annamalainagar.

Schiffman, H. 1969. *A Transformational Grammar of Tamil aspectual System*, Seattle.

Shanmugam, S V. 1968. *The Language of Tamil Inscriptions* (1340 to 1700 A.D.) Ph. D. Dissertation, Annmalai University.

——— 1970. "Case system in Dravidian" *Seminar on Dravidian Linguistics -II*, Annamalai University.

——— 1971. *Dravidian Nouns* (A comparative study) Annamalai University, Annamalainagar.

Smith, Carlota, S. 1969. " Determiners and Relative clauses in a Generative Grammar of English ", in Reibel and Schame (1969) 247–263.

Srinivas, M. N. 1965. *Religion & Society among the Coorgs of South India*, Asia Publishing house.

Srinivasa Varma, G. 970. *Vaagri Boli – An Indo - Aryan Language*, Annamalainagar.

Subbiah, G. 1972. *A Descriptive Study of Kota Language*, Ph D. Dissertation, Annamalai University.

Subrahmanyam, P. S. 1968. *A Descriptive Grammar of Gondi*, Annamalai University, Annamalainagar.

Subrahmanyam, P. S. 1971. *Dravidian Verb Morphology*, (A Comparativestudy)Annamalai University, Annamalainagar.

Vijayavenugopal, G. 1974. *Nominal Composition in Tamil*, Ph D. thesis submitted to the Annamalai University, Annamalainagar.

Zvelebil, K. 1970. *Comparative Dravidian Phonology*, Mouton, The Hague, Paris.